HISTORY INFORMATION FOR THE FOLLOWING MANUAL:

SERVICE MANUAL

WAVE CHASSIS

MODEL NAME	*REMOTE COMMANDER*	*DESTINATION*
KLV-32U100M	*RM-YA004*	*CANADA*
KLV-32U100M	*RM-YA004*	*US*
KLV-40U100M	*RM-YA004*	*CANADA*
KLV-40U100M	*RM-YA004*	*US*

ORIGINAL MANUAL ISSUE DATE: 1/2006

REVISION DATE	SUBJECT
3/2006	Several pages updated and revised.
4/2006	Add KLV-40U100M.
5/2007	Correction of Replacement Parts List.

LCD HDTV MONITOR

SONY®

9-878-348-04

SERVICE MANUAL

WAVE CHASSIS

MODEL NAME	REMOTE COMMANDER	DESTINATION
KLV-32U100M	*RM-YA004*	*CANADA*
KLV-32U100M	*RM-YA004*	*US*
KLV-40U100M	*RM-YA004*	*CANADA*
KLV-40U100M	*RM-YA004*	*US*

KLV-32U100M

RM-YA004

LCD HDTV MONITOR

SONY®

9-878-348-04

TABLE OF CONTENTS :

	Page
SECTION TITLE	
SPECIFICATIONS	4
SERVICE CAUTION	5-8
SECTION 1: DISASSEMBLY INSTRUCTION	9-10
SECTION 2: SERVICE MODE	11-12
SECTION 3: ADJUSTMENT	13-14
SECTION 4: TIMING CHART	15
SECTION 5: DIAGRAMS	
5-1. BOARD LAYOUT / WIRING LAYOUT	16
5-2. FRAME DIAGRAM	17-18
5-3. BLOCK DIAGRAM	19-21
5-4. SCHEMATICS	
A(Main) Board for KLV-32U100M	22-28
A(Main) Board for KLV-40U100M	29-35
G1(Power) Board for KLV-32U100M	36-37
G2(Power) Board for KLV-40U100M	38-40
H1, H2, H3 Borad for KLV-32/40U100M	41-43
SECTION 6:	
EXPLODED VIEW & REPLACEMENT PARTS LIST	44-45

SPECIFICATIONS :

Specifications

Screen size (measured diagonally):
KLV-32U100M: 32 inches
KLV-40U100M: 40 inches

Panel System:
LCD (Liquid Crystal Display) Panel

Display resolution (horizontal × vertical):
1,366 dots × 768 lines

VIDEO IN 1/2 (NTSC Video Standard):
S VIDEO (4-pin mini DIN):
Y: 1.0 Vp-p, 75 ohms unbalanced, sync negative
C: 0.286 Vp-p (Burst signal), 75 ohms
VIDEO: 1 Vp-p, 75 ohms unbalanced, sync negative
AUDIO: 500 mVrms (100% modulation)
Impedance: 47 kilohms

HD/DVD IN 3:
YPBPR (Component Video):
Y: 1.0 Vp-p, 75 ohms unbalanced, sync negative
PB: 0.7 Vp-p, 75 ohms
PR: 0.7 Vp-p, 75 ohms
Signal format: 480i, 480p, 720p, 1080i
AUDIO: 500 mVrms (100% modulation)
Impedance: 47 kilohms

HDMI IN 4:
HDMI: Video: 480i, 480p, 720p, 1080i
Audio: Two channel linear PCM 32, 44.1 and 48 kHz, 16, 20 and 24 bits
AUDIO: 500 mVrms (100% modulation)
Impedance: 47 kilohms

PC IN 5:
D-sub 15-pin, analog RGB, 0.7 Vp-p, 75 ohms, positive

PC AUDIO INPUT:
Stereo mini jack, 500m Vrms, 47 kilohms

Headphones:
Stereo mini jack
Impedance: 16 ohms

Speaker:
Full range: 4 × 20 cm (1 5/8 × 7 7/8 inches) (2)

Speaker output:
10 W + 10 W

Power requirement:
120 V AC, 60 Hz

Power consumption:
In use: KLV-32U100M: 150 W
KLV-40U100M: 220 W
In standby: Less than 1 W

Dimensions (W/H/D):
KLV-32U100M: (with stand) 798 × 580 × 220 mm (31 1/2 × 22 7/8 × 8 3/4 inches)
(without stand) 798 × 548 × 120 mm (31 1/2 × 21 5/8 × 4 3/4 inches)
KLV-40U100M: (with stand) 989 × 685 × 270 mm (39 × 27 × 10 3/4 inches)
(without stand) 989 × 653 × 127 mm (39 × 25 3/4 × 5 inches)

Mass:
KLV-32U100M: (with stand) 17.5 kg (38 lb. 10 oz.)
(without stand) 15.5 kg (34 lb. 3 oz.)
KLV-40U100M: (with stand) 29 kg (63 lb. 15 oz.)
(without stand) 25 kg (55 lb. 2 oz.)

Supplied accessories:
Remote control RM-YA004 (1)
Size AA batteries (2)
AC power cord (1)
HD15-HD15 cable (1)
Support belt (1), securing screw (1) and wood screw (1)
Operating Instructions (1)
Quick Setup Guide (1)
Leaflet (Installing the Wall-Mount Bracket, KLV-32U100M only) (1)
Warranty Card (1)

Optional accessories:
Headphones plug adaptor
Connecting cables
Wall-Mount Bracket SU-WL31 (KLV-32U100M)
SU-WL51 (KLV-40U100M)

✍ Select the desired mounting angle from 0, 5, 10 or 15 degrees for these models.

✍ Optional accessories' availability may depend on its stock.

Design and specifications are subject to change without notice.

WARNINGS AND CAUTIONS

CAUTION

These servicing instructions are for use by qualified service personnel only. To reduce the risk of electric shock, do not perform any servicing other than that contained in the operating instructions unless you are qualified to do so.

WARNING!!

An isolation transformer should be used during any service to avoid possible shock hazard, because of live chassis. The chassis of this receiver is directly connected to the ac power line.

⚠ SAFETY-RELATED COMPONENT WARNING!!

Replace all components with Sony parts whose part numbers appear as shown in this manual or in supplements published by Sony.

ATTENTION!!

Ces instructions de service sont à l'usage du personnel de service qualifié seulement. Pour prévenir le risque de choc électrique, ne pas faire l'entretien autre que celui contenu dans le Mode d'emploi à moins que vous soyez qualifié faire ainsi.

Afin d'eviter tout risque d'electrocution provenant d'un châssis sous tension, un transformateur d'isolement doit etre utilisé lors de tout dépannage. Le châssis de ce récepteur est directement raccordé à l'alimentation du secteur.

⚠ ATTENTION AUX COMPOSANTS RELATIFS A LA SECURITE!!

Remplacer tout les composants par des composants Sony dont le numero de piece est indique dans le present manuel ou dans des supplements publies par Sony.

SAFETY-RELATED COMPONENT WARNING

It is essential that all critical parts be replaced only with thepart number specified in the electrical parts list to prevent electric shock, fire, or other hazard.

NOTE: Do not modify the original design without obtaining written permission from the manufacturer or you will void the original parts and labor guarantee.

USE CAUTION WHEN HANDLING THE LCD PANEL

When repairing the LCD panel, be sure you are grounded by using a wrist band.

To avoid damaging the LCD panel:

- → do not press on the panel or frame edge to avoid the risk of electric shock.
- → do not scratch or press on the panel with any sharp objects.
- → do not leave the module in high temperatures or in areas of high humidity for an extended period of time.
- → do not expose the LCD panel to direct sunlight.
- → avoid contact with water. It may cause a short circuit within the module.
- → disconnect the AC power when replacing the backlight (CCFL) or inverter circuit. (High voltage occurs at the inverter circuit at 650Vrms.)
- → always clean the LCD panel with a soft cloth material.
- → use care when handling the wires or connectors of the inverter circuit. Damaging the wires may cause a short.
- → protect the panel from ESD to avoid damaging the electronic circuit (C-MOS).

LEAKAGE CURRENT HOT CHECK CIRCUIT

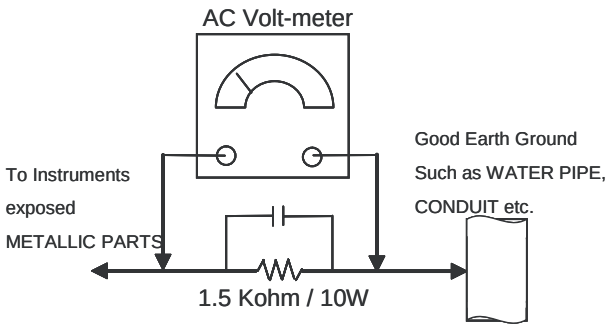

The circuit boards used in these models have been processed using
Lead Free Solder.
The servicing of these boards requires special precautions to be taken
as outlined below.

It is strongly recommended to use Lead Free Solder material in order to guarantee optimal quality of new solder joints.
Lead Free Solder is available under the following part numbers :

Part number	Diameter	Remarks
7-640-005-19	0.3 mm	0.25 kg
7-640-005-20	0.4 mm	0.50 kg
7-640-005-21	0.5 mm	0.50 kg
7-640-005-22	0.6 mm	0.25 kg
7-640-005-23	0.8 mm	1.00 kg
7-640-005-24	1.0 mm	1.00 kg
7-640-005-25	1.2 mm	1.00 kg
7-640-005-26	1.6 mm	1.00 kg

Due to the higher melting point of Lead Free Solder the soldering iron tip temperature needs to be set to 370 degrees centigrade.
This requires soldering equipment capable of accurate temperature control coupled with a good heat recovery characteristics.

For more information on the use of Lead Free Solder, please refer to http://www.sony-training.com

SAFETY CHECK-OUT

After correcting the original service problem, perform the following safety checks before releasing the set to the customer:

1. Check the area of your repair for unsoldered or poorly soldered connections. Check the entire board surface for solder splashes and bridges.

2. Check the interboard wiring to ensure that no wires are “pinched” or touching high-wattage resistors.

3. Check that all control knobs, shields, covers, ground straps, and mounting hardware have been replaced. Be absolutely certain that you have replaced all the insulators.

4. Look for unauthorized replacement parts, particularly transistors, that were installed during a previous repair. Point them out to the customer and recommend their replacement.

5. Look for parts which, though functioning, show obvious signs of deterioration. Point them out to the customer and recommend their replacement.

6. Check the line cords for cracks and abrasion. Recommend the replacement of any such line cord to the customer.

7. Check the antenna terminals, metal trim, “metallized” knobs, screws, and all other exposed metal parts for AC leakage. Check leakage as described below.

The AC leakage from any exposed metal part to earth ground and from all exposed metal parts to any exposed metal part having a return to chassis, must not exceed 0.5 mA (500 microamperes). Leakage current can be measured by any one of three methods.

1. A commercial leakage tester, such as the Simpson 229 or RCA WT-540A. Follow the manufacturers’ instructions to use these instructions.

2. A battery-operated AC milliampmeter. The Data Precision 245 digital multimeter is suitable for this job.

3. Measuring the voltage drop across a resistor by means of a VOM or battery-operated AC voltmeter. The “limit” indication is 0.75 V, so analog meters must have an accurate low voltage scale. The Simpson’s 250 and Sanwa SH-63TRD are examples of passive VOMs that are suitable. Nearly all battery-operated digital multimeters that have a 2 VAC range are suitable (see Figure A).

How to Find a Good Earth Ground

A cold-water pipe is a guaranteed earth ground; the cover-plate retaining screw on most AC outlet boxes is also at earth ground. If the retaining screw is to be used as your earth ground, verify that it is at ground by measuring the resistance between it and a cold-water pipe with an ohmmeter. The reading should be zero ohms.

If a cold-water pipe is not accessible, connect a 60- to 100-watt trouble- light (not a neon lamp) between the hot side of the receptacle and the retaining screw. Try both slots, if necessary, to locate the hot side on the line; the lamp should light at normal brilliance if the screw is at ground potential (see Figure B).

Leakage Test

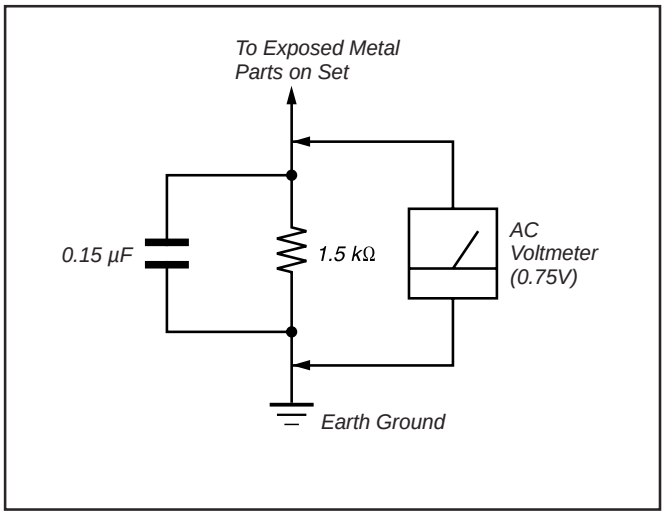

Figure A. Using an AC voltmeter to check AC leakage.

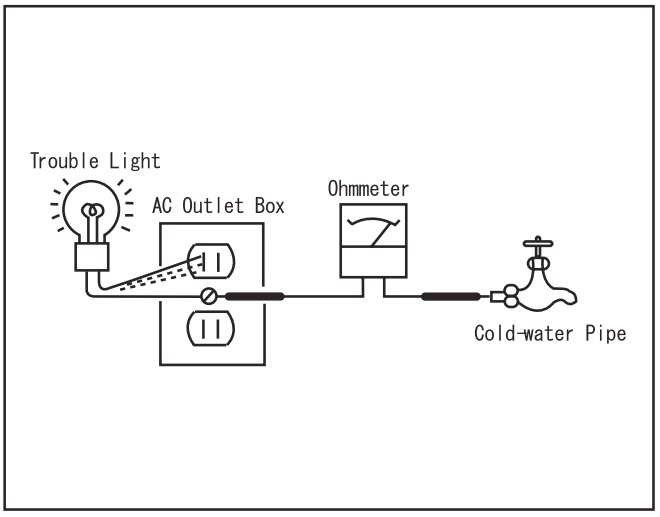

Figure B. Checking for earth ground.

SECTION 1 : DISASSEMBLY

	KLV-32U100M		KLV-40U100M	
Step	**Figure**	**Description**	**Figure**	**Description**
1.1 **Service Position**		Gently place the monitor face down on a table.		Gently place the monitor face down on a table.
1.2 **Stand Removal** *The rear cover can be removed without removing the tabletop Stand.		Remove 6 screws to release the Tabletop Stand from the unit.		Remove 8 screws to release the Tabletop Stand from the unit.
1.3 **Rear Cover Removal**		Remove 12 screws to release the rear cover.	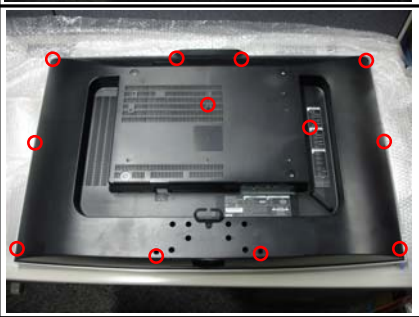	Remove 12 screws to release the rear cover.
1.4 **Main shield Removal**	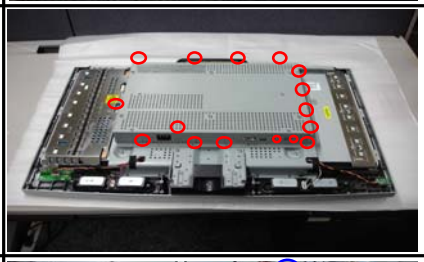	Remove 16 screws to release the main shield. Note: There are four screws in the top of the shield (not visible in this photo).	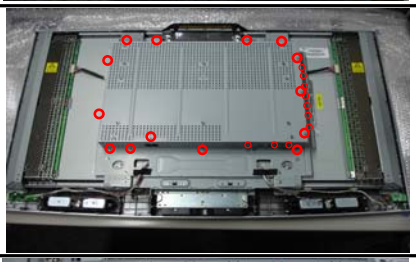	Remove 24 screws to release the main shield. Note: There are four screws in the top of the shield (not visible in this photo).
1.5 **A Board (Main Board) Assembly and G Board (Power Board) Assembly Removal**	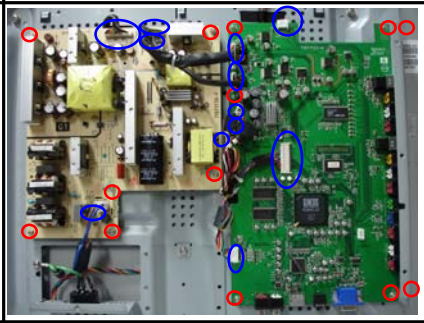	Remove 7 screws / 8 connectors to release the A Board (Main Board) Assembly from the main frame. Remove 6 screws / 4 connectors to release the G1 Board (Power Board) Assembly.	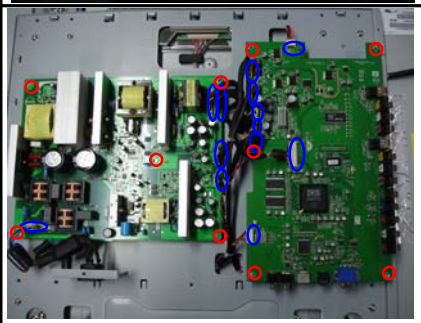	Remove 5 screws / 8 connectors to release the A Board (Main Board) Assembly from the main frame. Remove 5 screws / 5 connectors to release the G2 Board (Power Board) Assembly.
1.6 **Button Assy Removal**	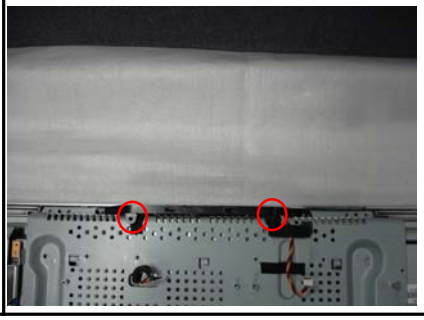	Remove the 2 screws then remove the Button Assy.	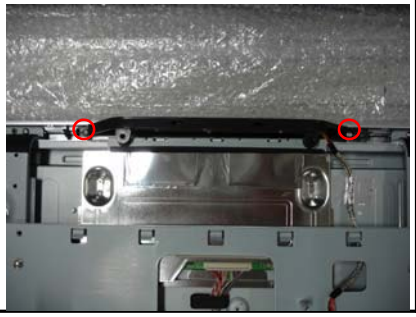	Remove the 2 screws then remove the Button Assy.

1.7	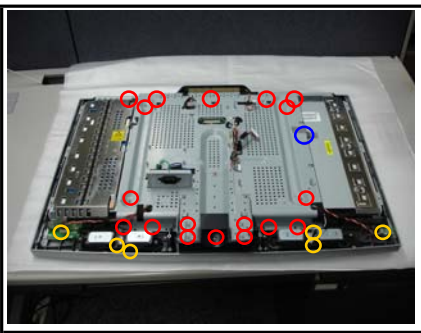	Remove 18 screws (Red) and 1 Aluminum Tape (Blue) and 6 connectors (Yellow).	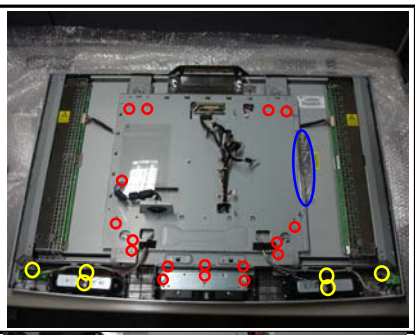	Remove 17 screws (Red) and 1 Aluminum Tape (Blue) and 6 connectors (Yellow).
Frame Removal	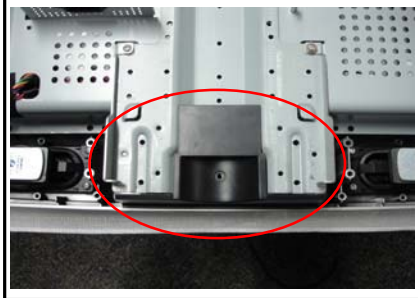	Cover Stand Removal		Cover Stand Removal
	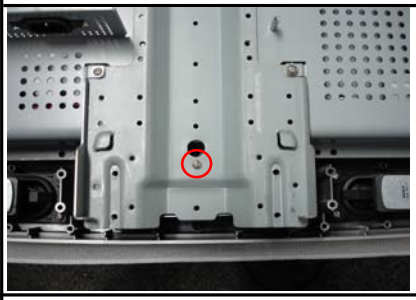	Remove 1 screw. Remove Frame.	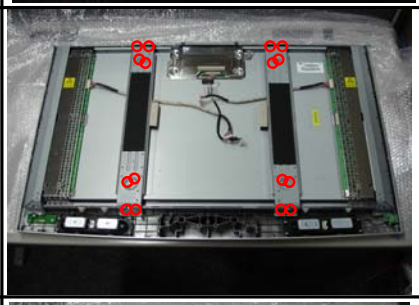	Remove 16 screws. Remove 2 frames
1.8 **Bezel Removal**	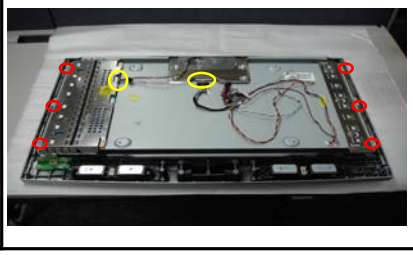	Remove 6 screws and 2 connectors Remove panel from the bezel. (Gently lift out the panel from the bezel using caution to avoid scratching the panel)	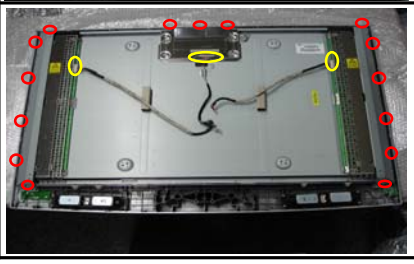	Remove 15 screws and 3 connectors Remove panel from the bezel. (Gently lift out the panel from the bezel using caution to avoid scratching the panel)

SECTION 2 : SERVICE MODE (factory mode)

To adjust various set features, use the Remote Commander to put the set into service mode to display the Service menu.

(Input the signal to monitor. Please confirm that there is no OSD before enter the service mode)

1) Press "⊹" Enter button twice
2) Press "MUTING" button
3) Press "⊹" Enter button
4) Press "MUTING" button
5) Press "MENU" button

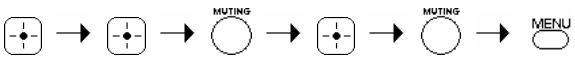

To exit "SERVICE MODE", pressthe "MENU" button

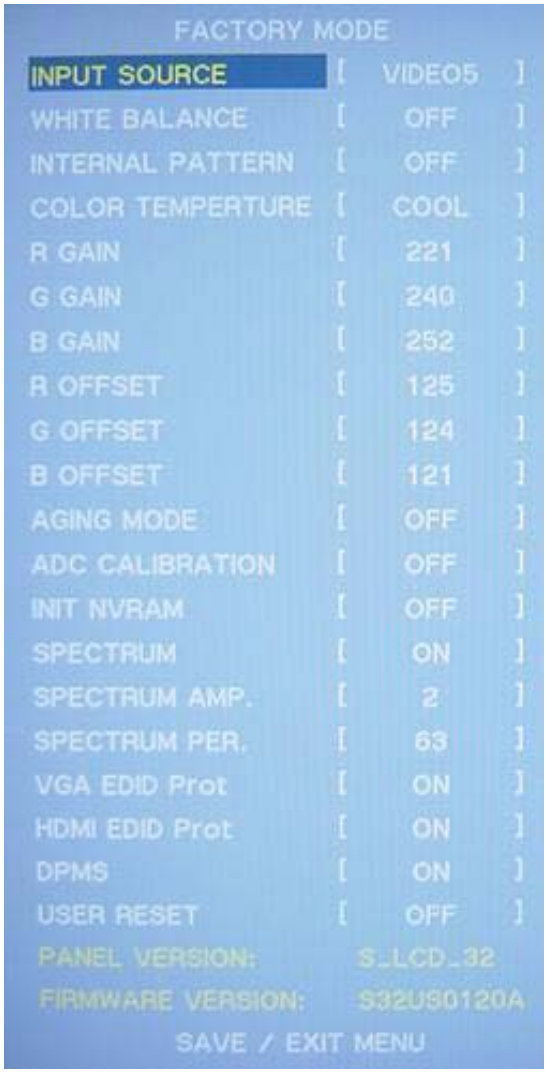

Description of SERVICE MENU

INPUT SOURCE	Input source change menu (Video1→2→3→4→5→)
WHITE BALANCE	Default is “OFF”. When you adjust White Balance, change it to “ON”
INTERNAL PATTERN	Do not use it. Default is “OFF”. It is for production use.
COLOR TEMPERATURE	Color mode change menu (COOL →NEUTRAL →WARM)
R GAIN	White balance adjustment resister. Refer to W/B adjust procedure
G GAIN	
B GAIN	
R OFFSET	
G OFFSET	
B OFFSET	
AGING MODE	Default is “OFF”. When you switch to “ON” monitor shows single color (R, G, B, W) continuously without signal.
ADC CALBRATION	Do not use it. It is for production ADC calibration use.
INT NVRAM	Do not use it. Memory initialization. Because adjust data will be gone.
SPECTRUM	Do not use these. These are for only production use. Default value “SPECTRUM” : ON “SPECTRUM AMP” : 2 “SPECTRUM PRE” : 63 “VGA EDID Prot” : ON “HDMI EDID Prot” : ON “DPMS” : ON
SPECTRUM AMP	
SPECTRUM PRE	
VGA EDID Prot	
HDMI EDID Prot	
DPMS	
USER RESET	Default is “OFF”.When you switch to “ON” User reset works and user adjusted data will be reset. When it is completed it is automatically switch to“OFF”.CAUTION: During user reset operation please do not monitor power off. Otherwise data may be lost.
PANEL VERSION	It is just panel version information
FARMWARE VERSION	It is just Farm Ware version information
SAVE / EXIT MENU	By pressing “MENU”, monitor is exit from “SERVICE MODE”. And it is automatically SAVE then.

SECTION 3 : ADJUSTMENT

3.1. Preparation

1) Allow approximately 30 minutes for the set to warm up before proceeding with the white balance adjustment.

2) Connect 3 terminal of 480i signal cable (Y / Pb / Pr) from the signal source to monitor INPUT3

3) Enter "SERVICE MODE". The method to enter "SERVICE MODE" is described in next section.

4) Select "VIDEO3" from INPUT SOURCE in SERVICE MENU

5) Set "R", "G", "B", "GAIN" and "R", "G", "B", "Offset" value as same as "**3.5.** AVERAGE VALUE"

3.2. Adjust White Balance of "COOL" temperature;

1) Select "COOL" from COLOR TEMPERATURE in SERVICE MENU
2) Input 65IRE Full white pattern signal into INPUT3
3) Adjust "RGB GAIN" in SERVICE MENU if needed
4) Input 30IRE Full white pattern signal into INPUT3
5) Adjust "RGB OFFSET" in SERVICE MENU if needed
6) Repeat adjustment of 2) to 5) so that White Balance is as same level as good monitor

3.3. Adjust White Balance of "NEUTRAL" temperature;

7) Select "NEUTRAL" from COLOR TEMPERATURE in SERVICE MENU
8) Repeat adjustment as same step of 2) to 5) till White Balance is as same level as good monitor

3.4. Adjust White Balance of "WARM" temperature;

9) Select "WARM" from COLOR TEMPERATURE in SERVICE MENU
10) Repeat adjustment as same step of 2) to 5) till White Balance is as same level as good monitor

3.5. AVERAGE VALUE of each resistor

For KLV-32U100M

	Red Gain	Green Gain	Blue Gain	Red Offset	Green Offset	Blue Offset
COOL	223	240	253	125	123	123
NEUTRAL	238	255	253	125	123	123
WARM	252	255	223	125	124	124

For KLV-40U100M

	Red Gain	Green Gain	Blue Gain	Red Offset	Green Offset	Blue Offset
COOL	237	238	254	124	123	125
NEUTRAL	253	251	242	123	123	125
WARM	255	242	206	123	125	125

SECTION 4 ：TIMING CHART

- Video signal is NTSC 3.58 format (15.7 kHz, 60 Hz) with 7.5% IRE setup.
- Component signal is 480i, 480p, 1080i and 720p.
- HDMI signal is VGA, 480i, 480p, 1080i and 720p.
- Supported PC Input Signals Table:

Resolution			Horizontal Frequency (kHz)	Vertical Frequency (Hz)
Signal Name	Horizontal[Pixel]	Vertical[Pixel]		
VGA	640	480	31.5	60
	640	480	37.9	72
	640	480	37.5	75
DOS TEXT	720	400	31.5	70
SVGA	800	600	35.2	56
	800	600	37.9	60
	800	600	46.9	75
	800	600	48.1	72
	848	480	31.0	60
XGA	1024	768	48.4	60
	1024	768	56.5	70
	1024	768	60.0	75
WXGA	1280	768	47.4	60
	1280	768	47.8	60
	1280	768	60.3	75
	1360	768	47.7	60

SECTION 5 : DIAGRAMS

5. Diagrams

5-1. Board LOCATION / WIRING

KLV-32U100M

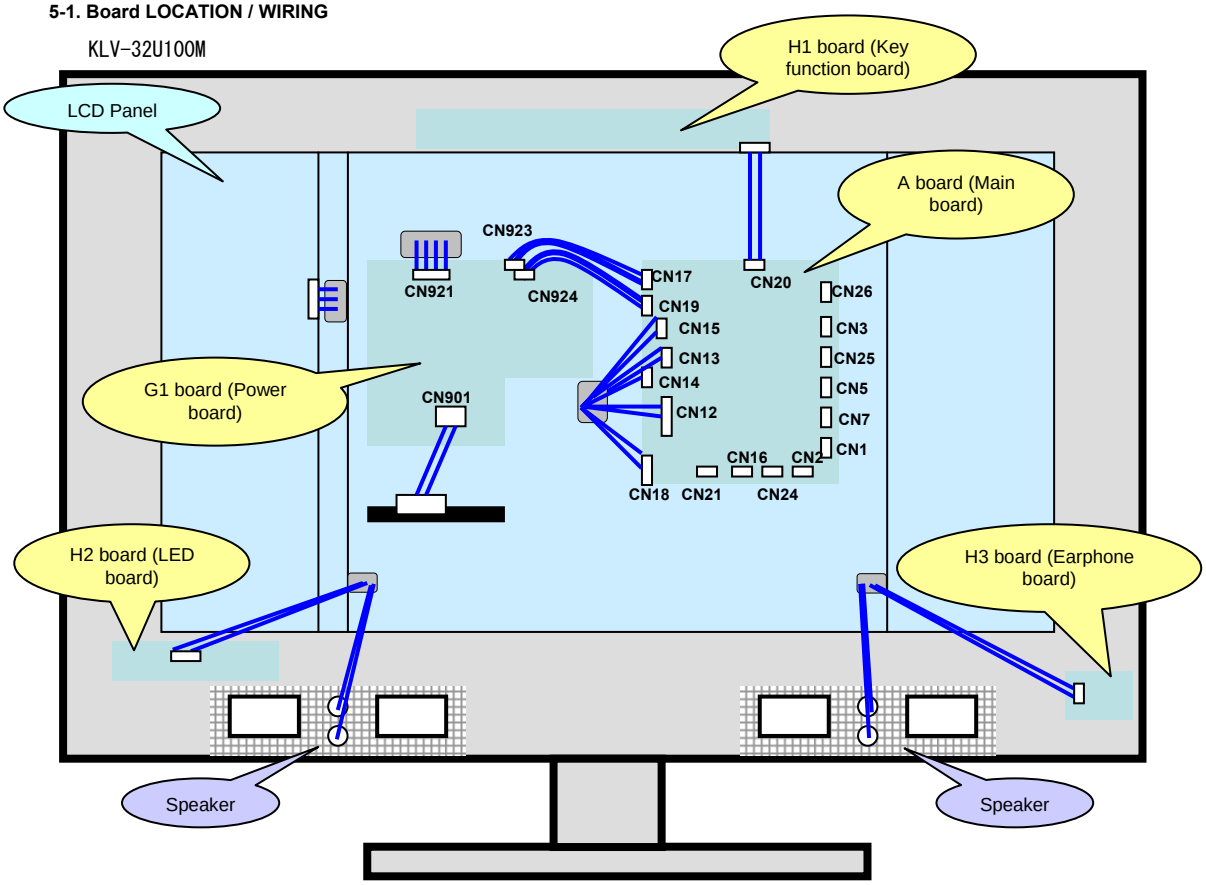

KLV-40U100M

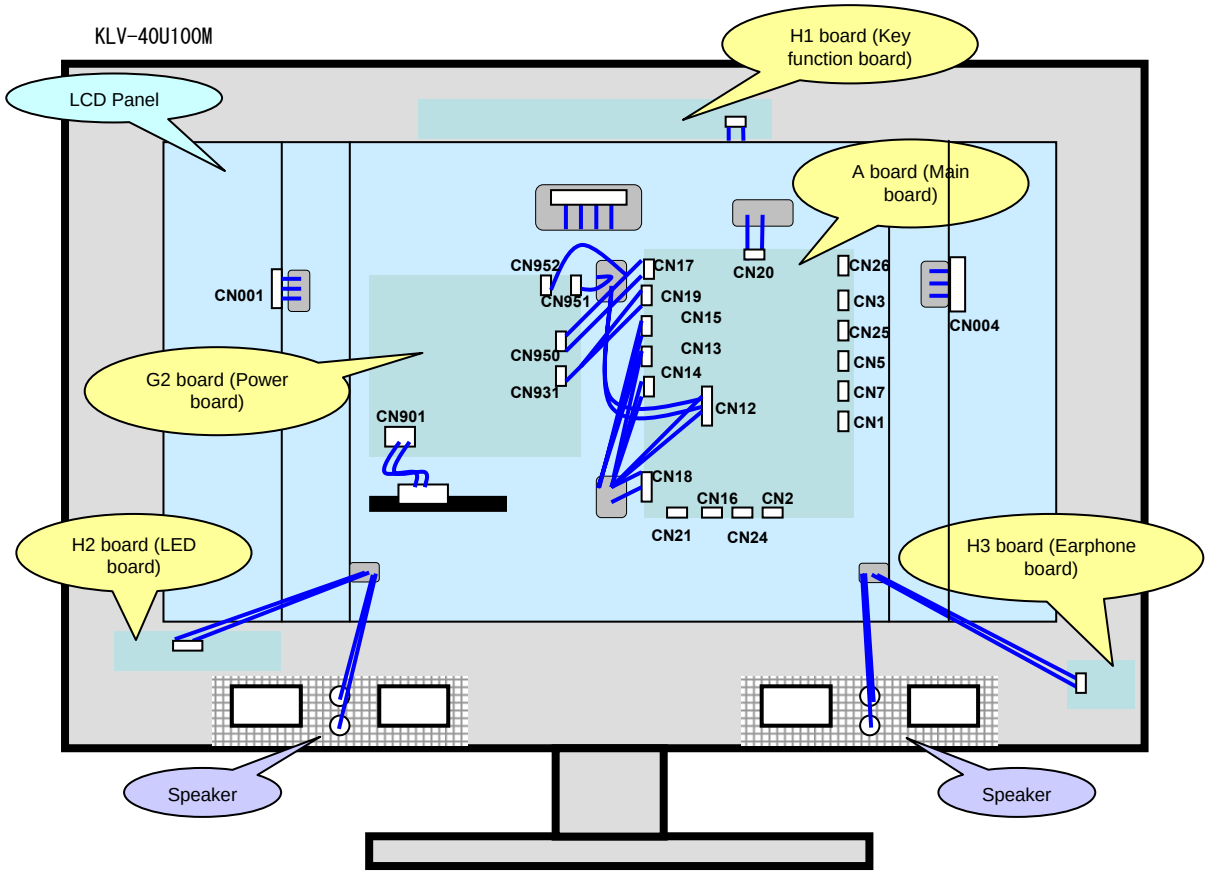

5-2-1. KLV-32U100M Frame Diagram

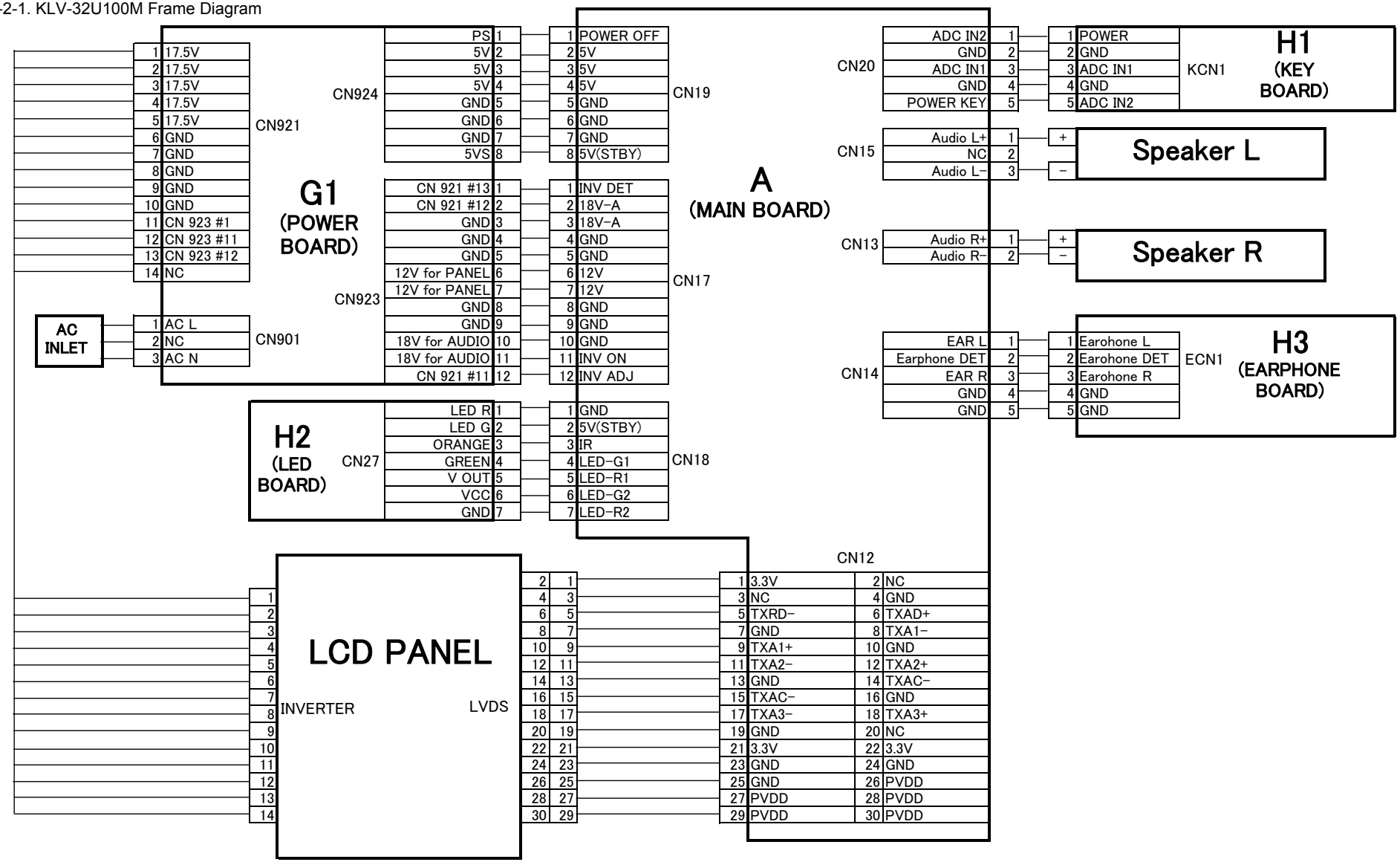

5-2-2. KLV-40U100M Frame Diagram

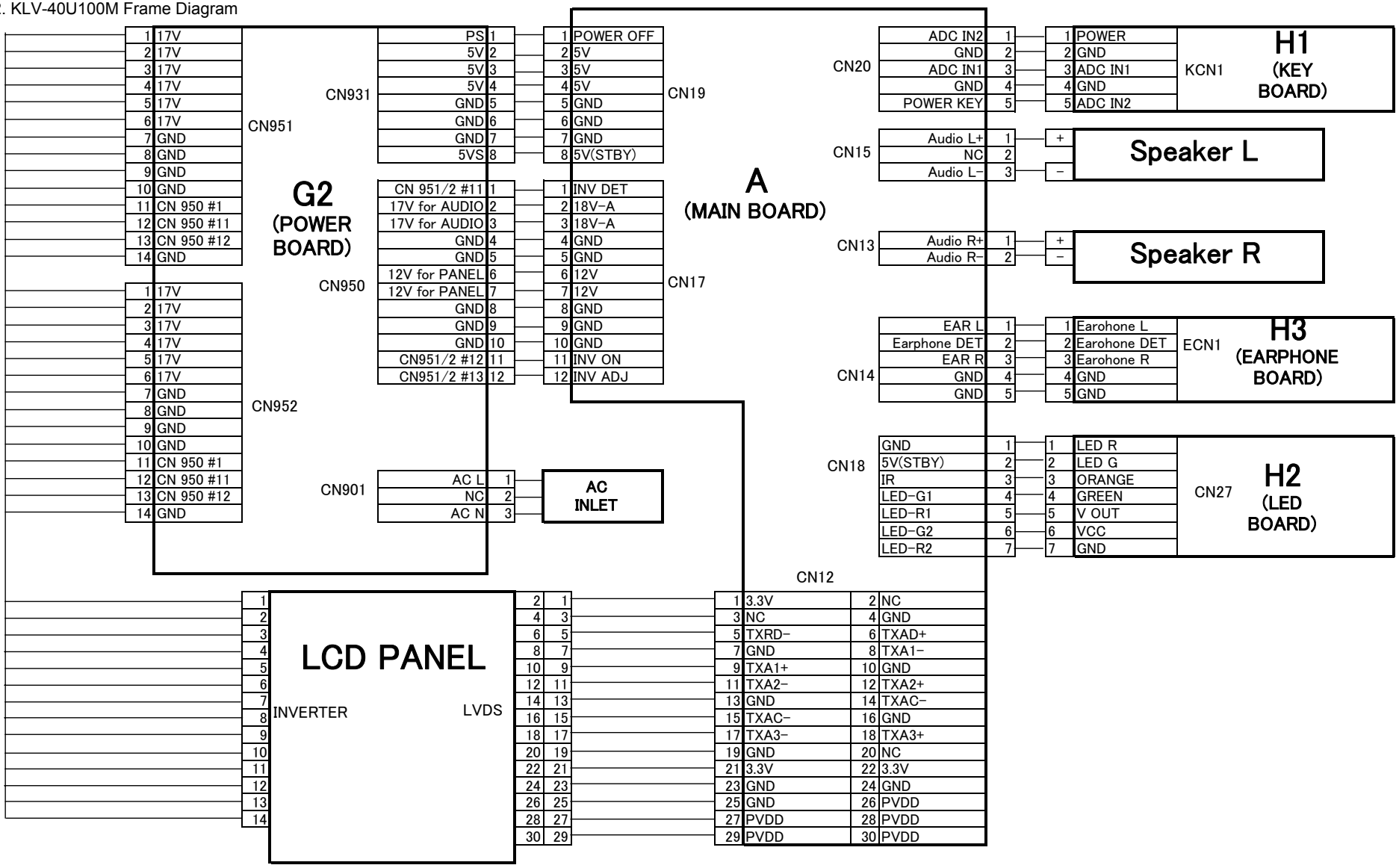

5-3-1. A (Main) Board Block Diagram

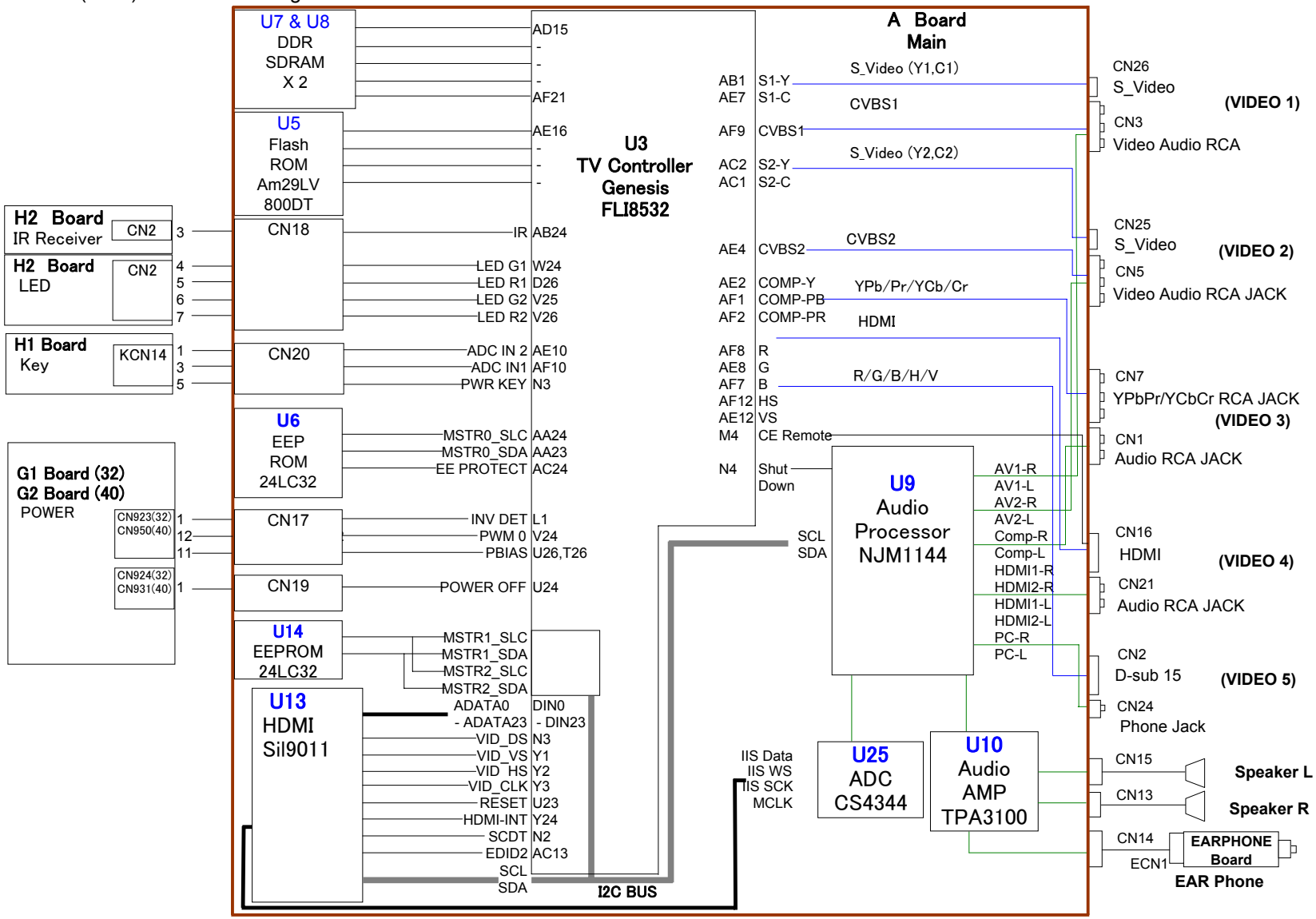

5-3-2. KLV-32U100M G1 (Power) Board Block Diagram

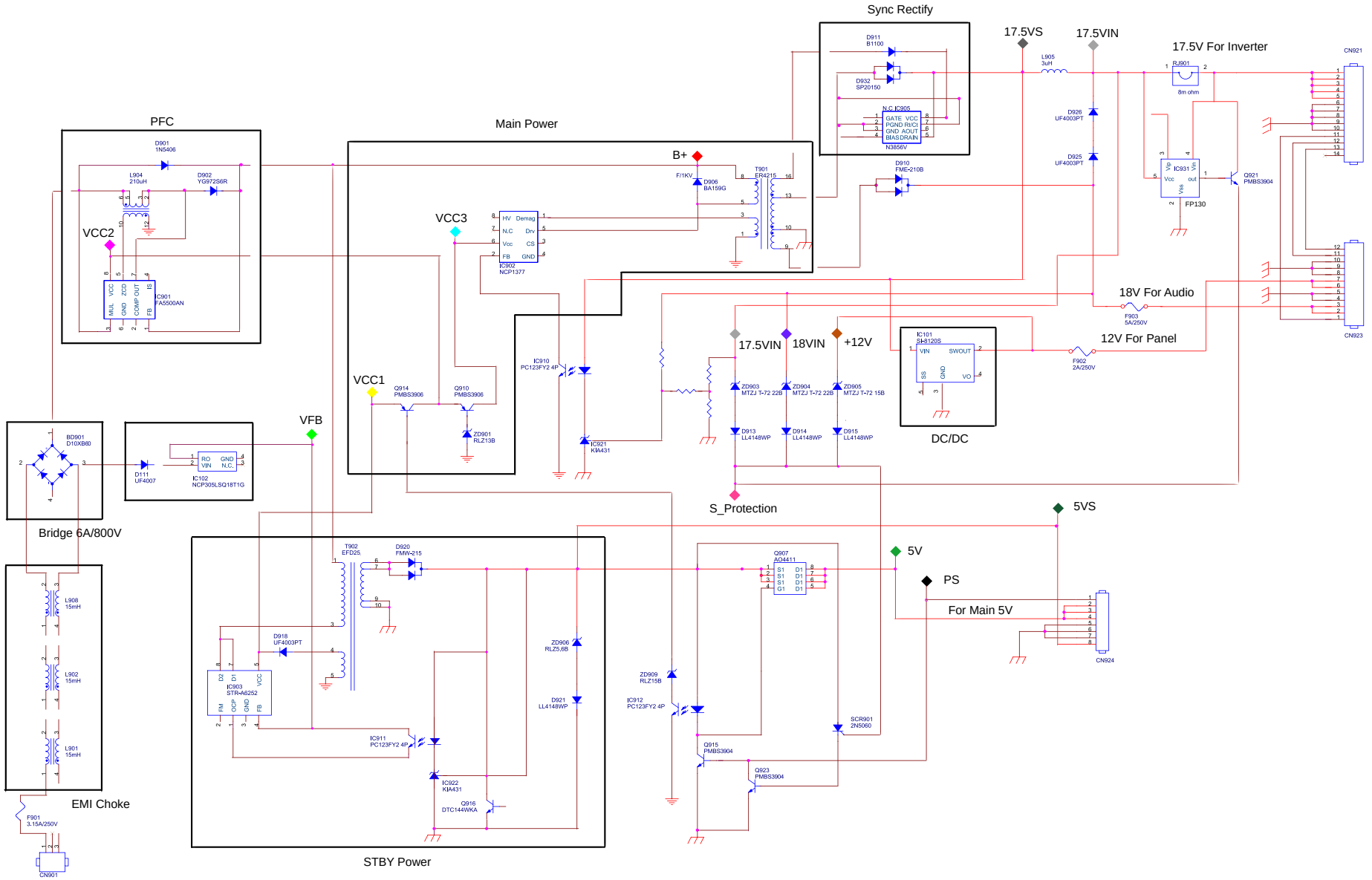

5-3-3. KLV-40U100M G2 (Power) Board Block Diagram

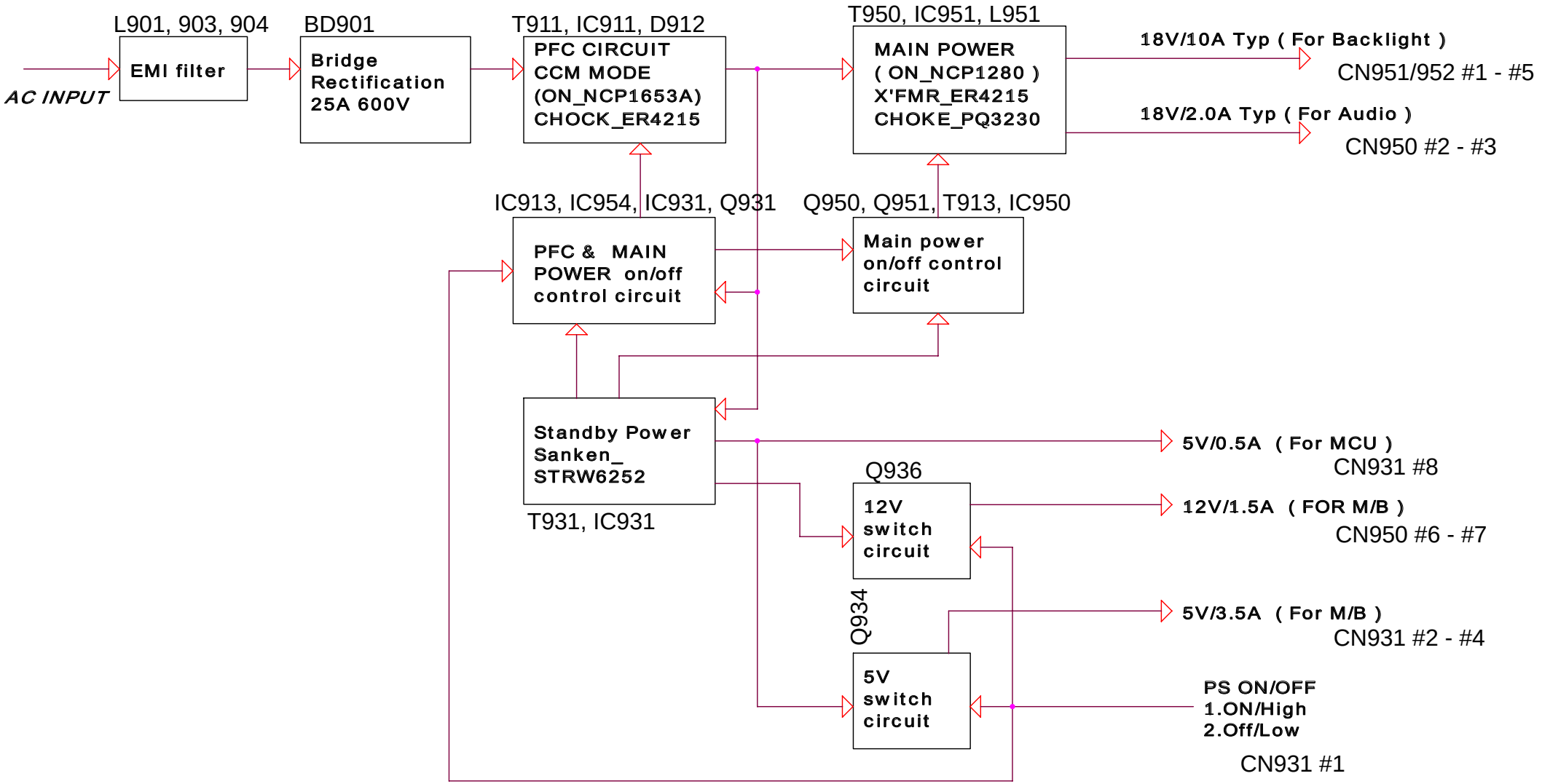

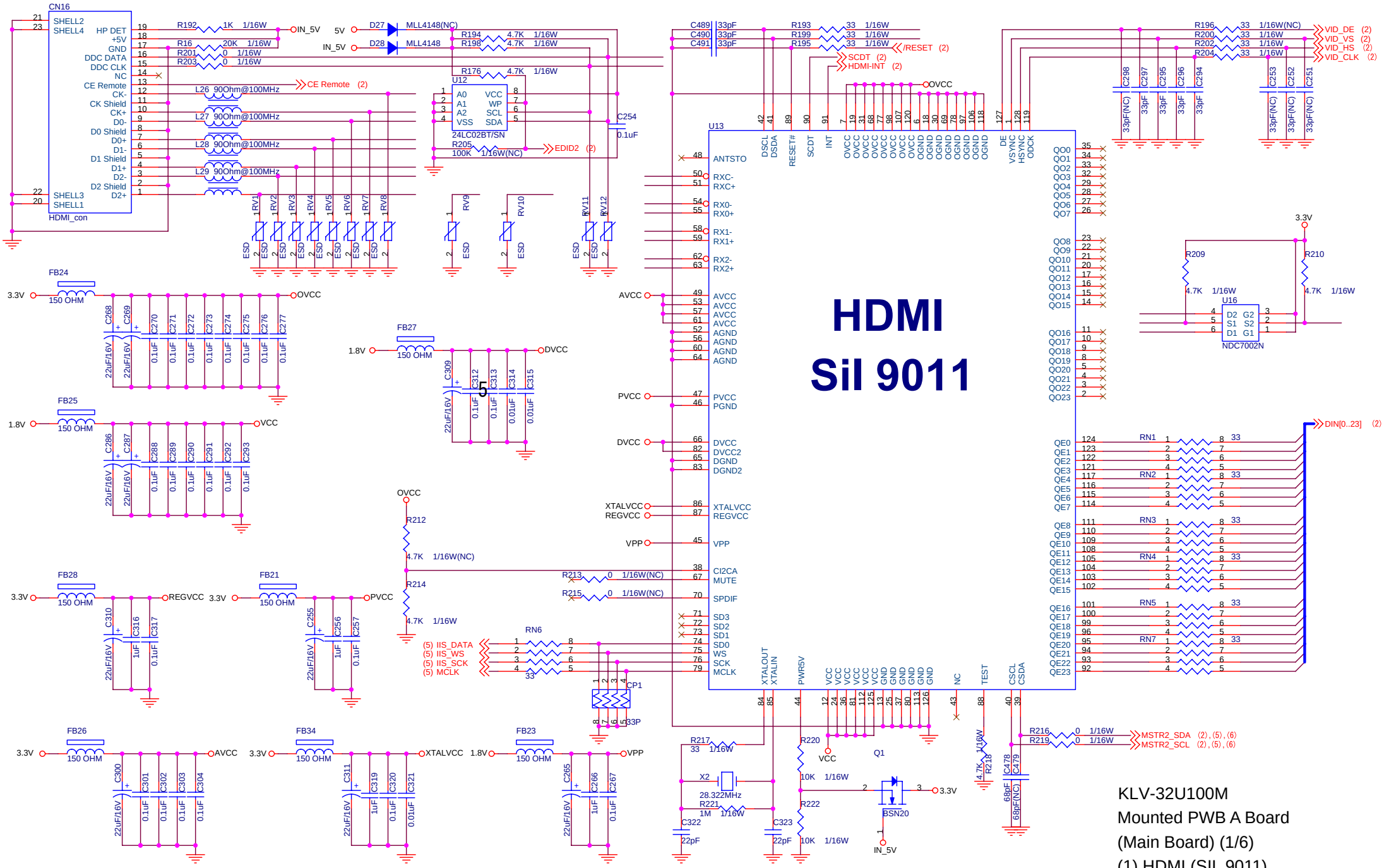

KLV-32U100M
Mounted PWB A Board
(Main Board) (1/6)
(1) HDMI (SIL 9011)

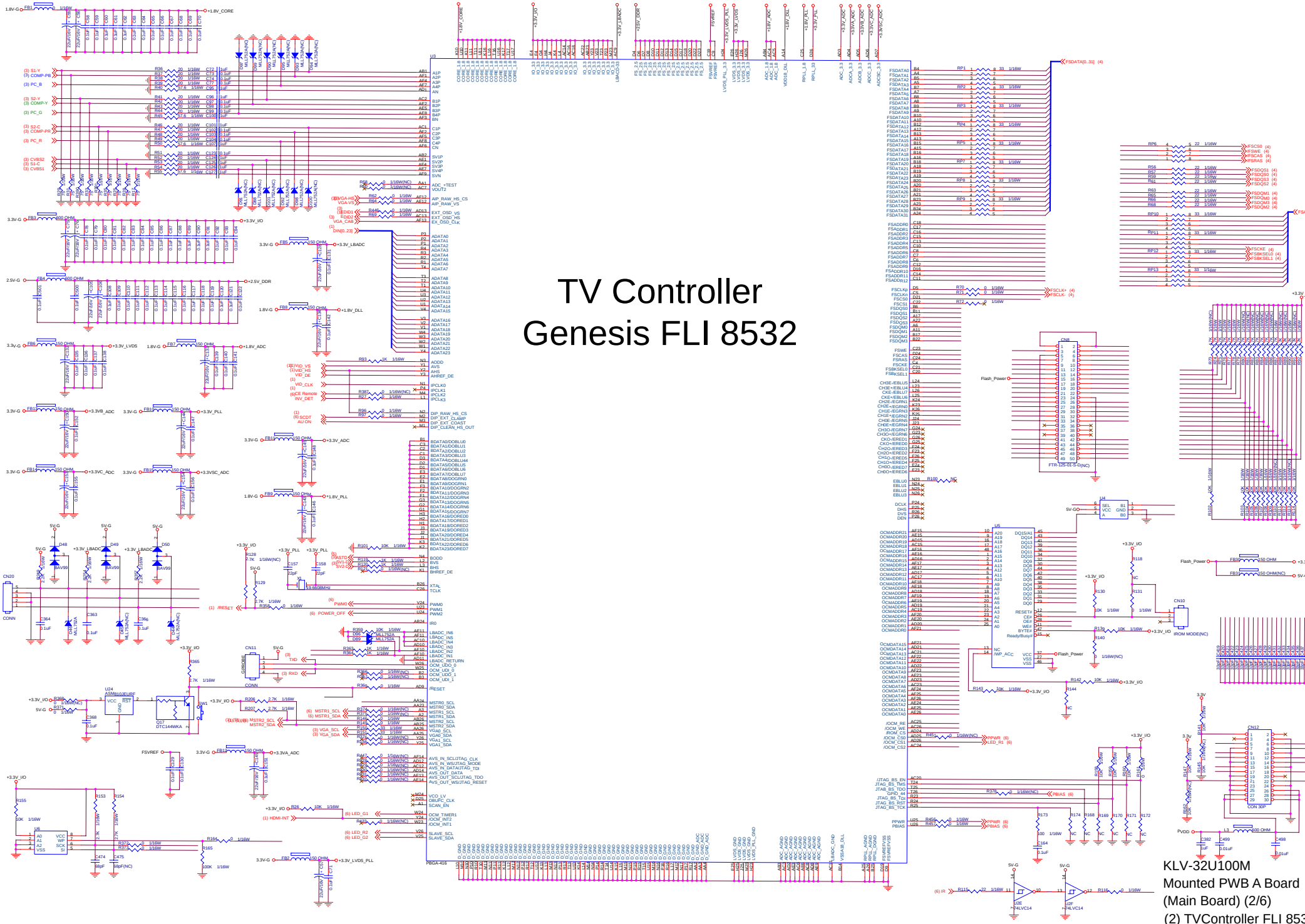

KLV-32U100M
Mounted PWB A Board
(Main Board) (2/6)
(2) TVController FLI 8532

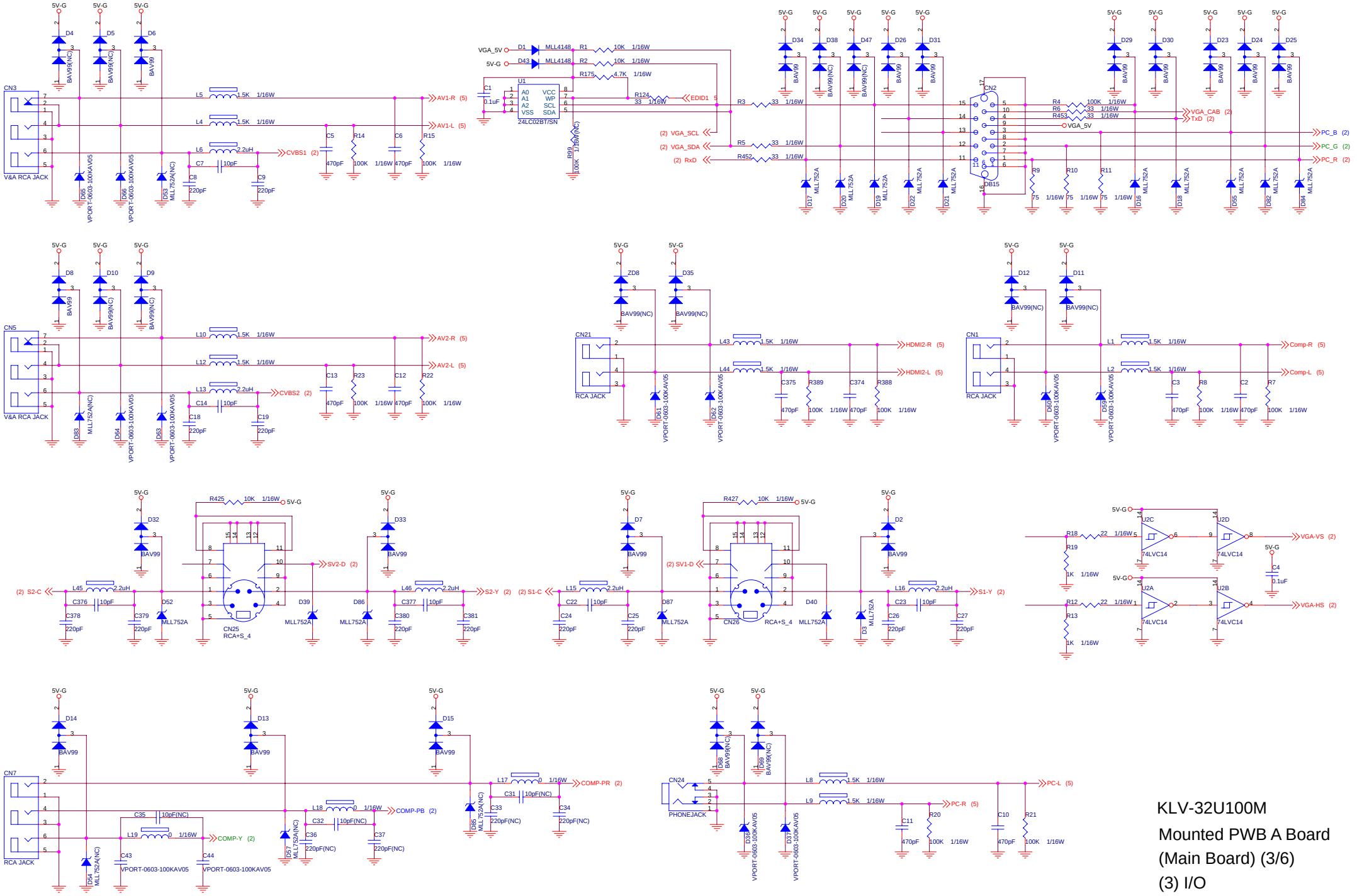

KLV-32U100M
Mounted PWB A Board
(Main Board) (3/6)
(3) I/O

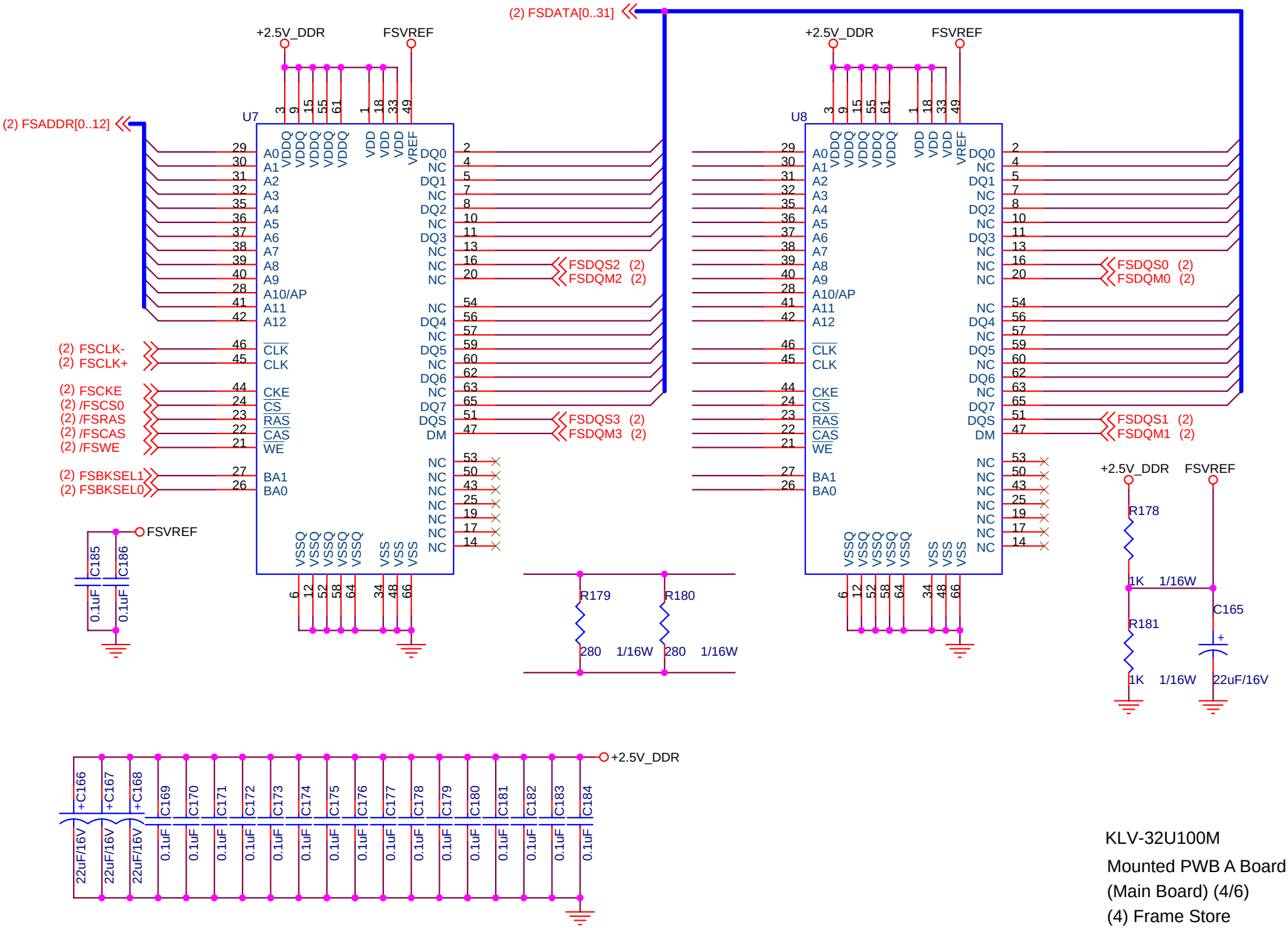

KLV-32U100M

Mounted PWB A Board

(Main Board) (4/6)

(4) Frame Store

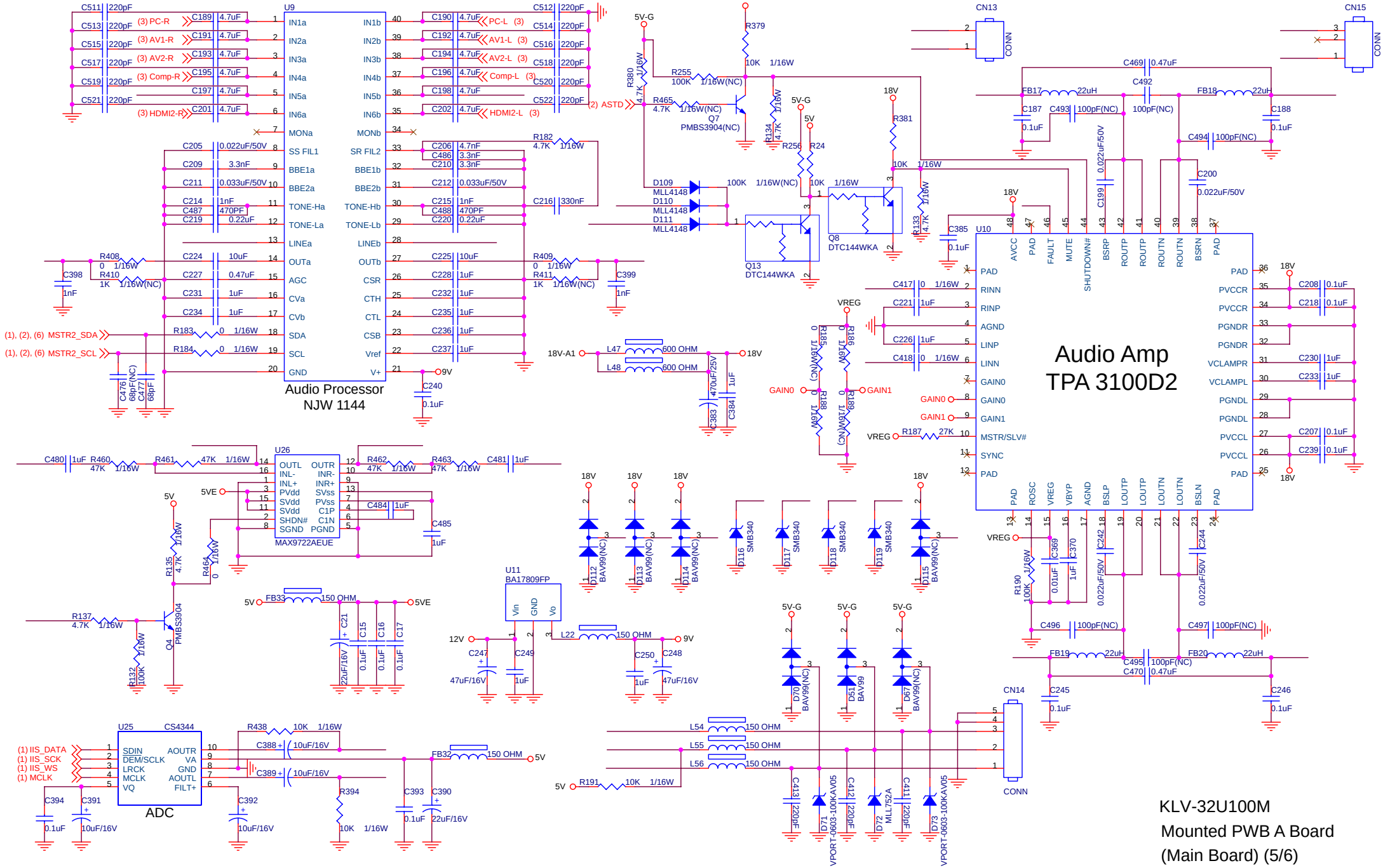

KLV-32U100M
Mounted PWB A Board
(Main Board) (5/6)
(5) Audio Block

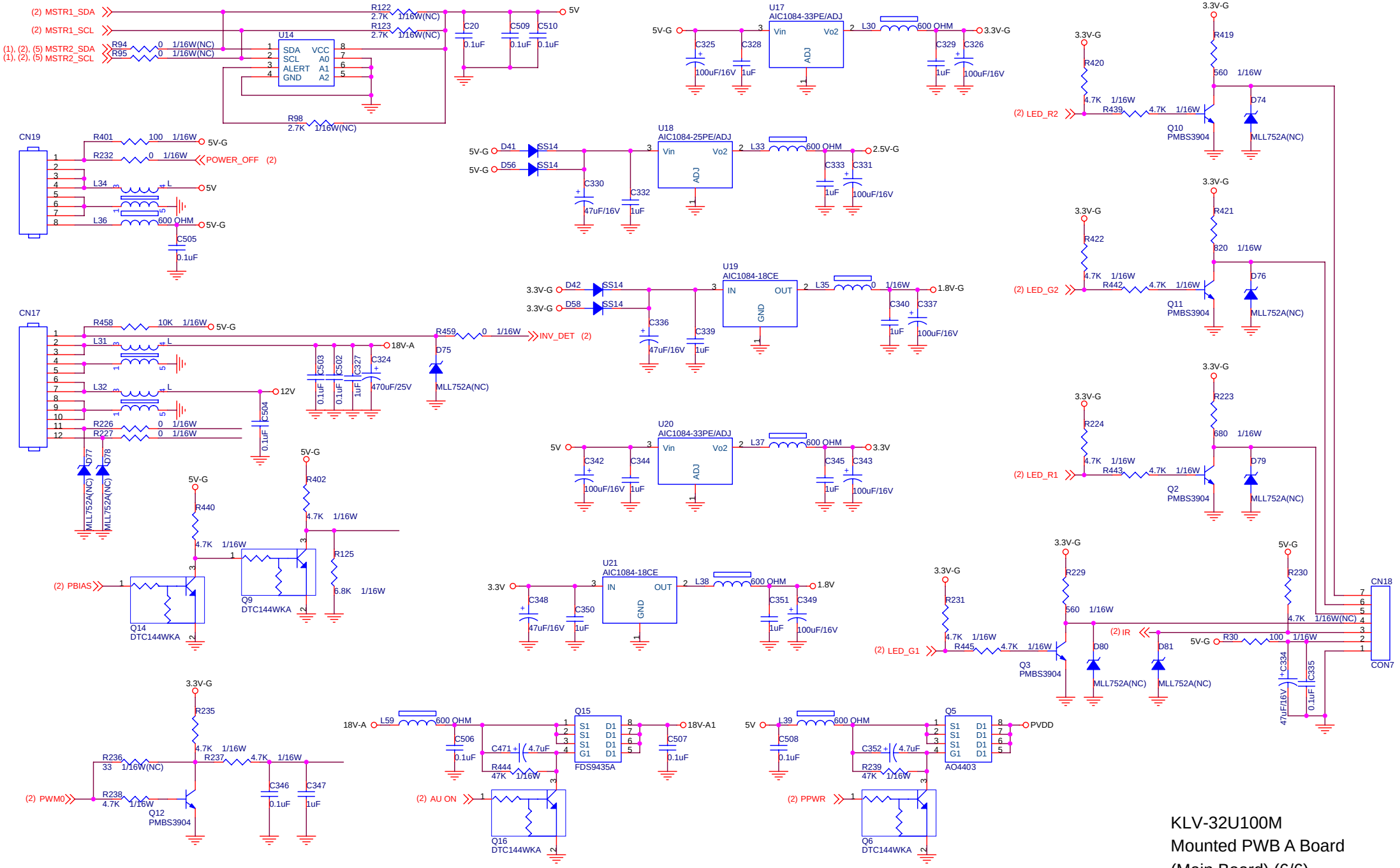

KLV-32U100M
Mounted PWB A Board
(Main Board) (6/6)
(6) Power

PCB LAYOUT

KLV-32U100M

A Board (Main Board) A-side, B-side

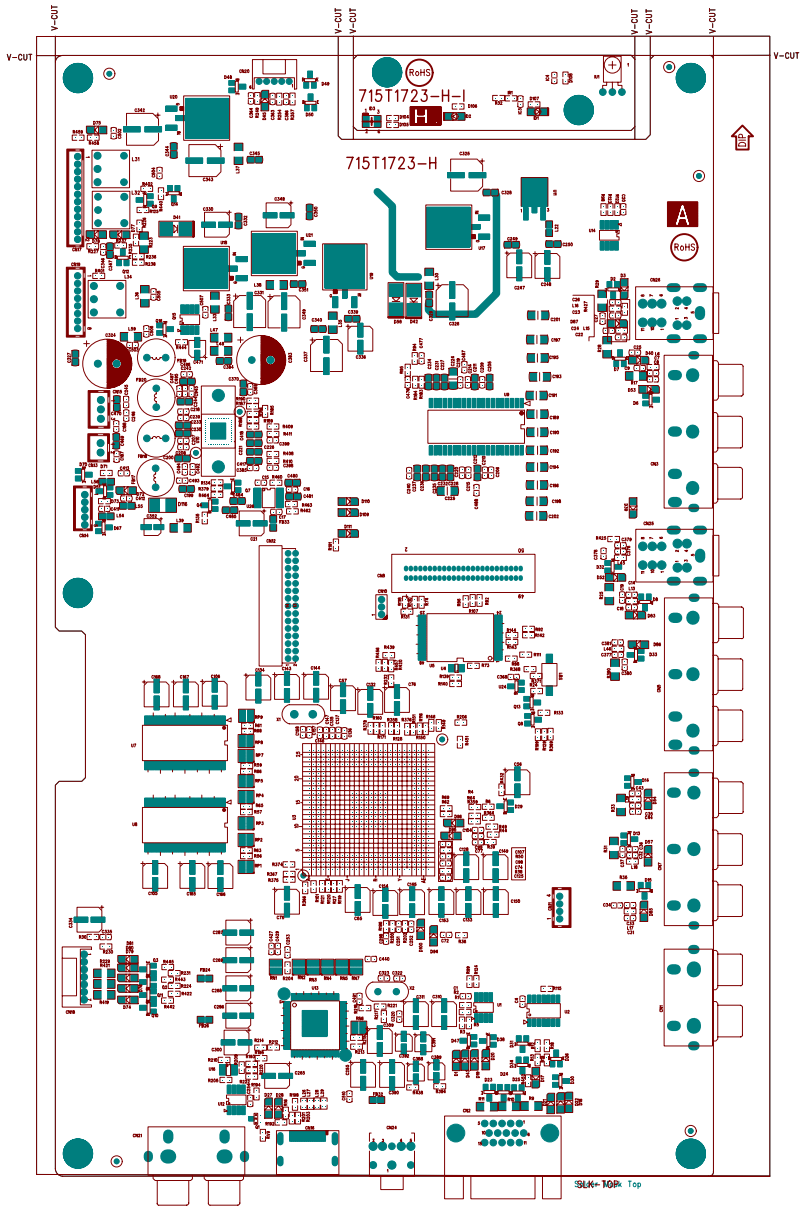

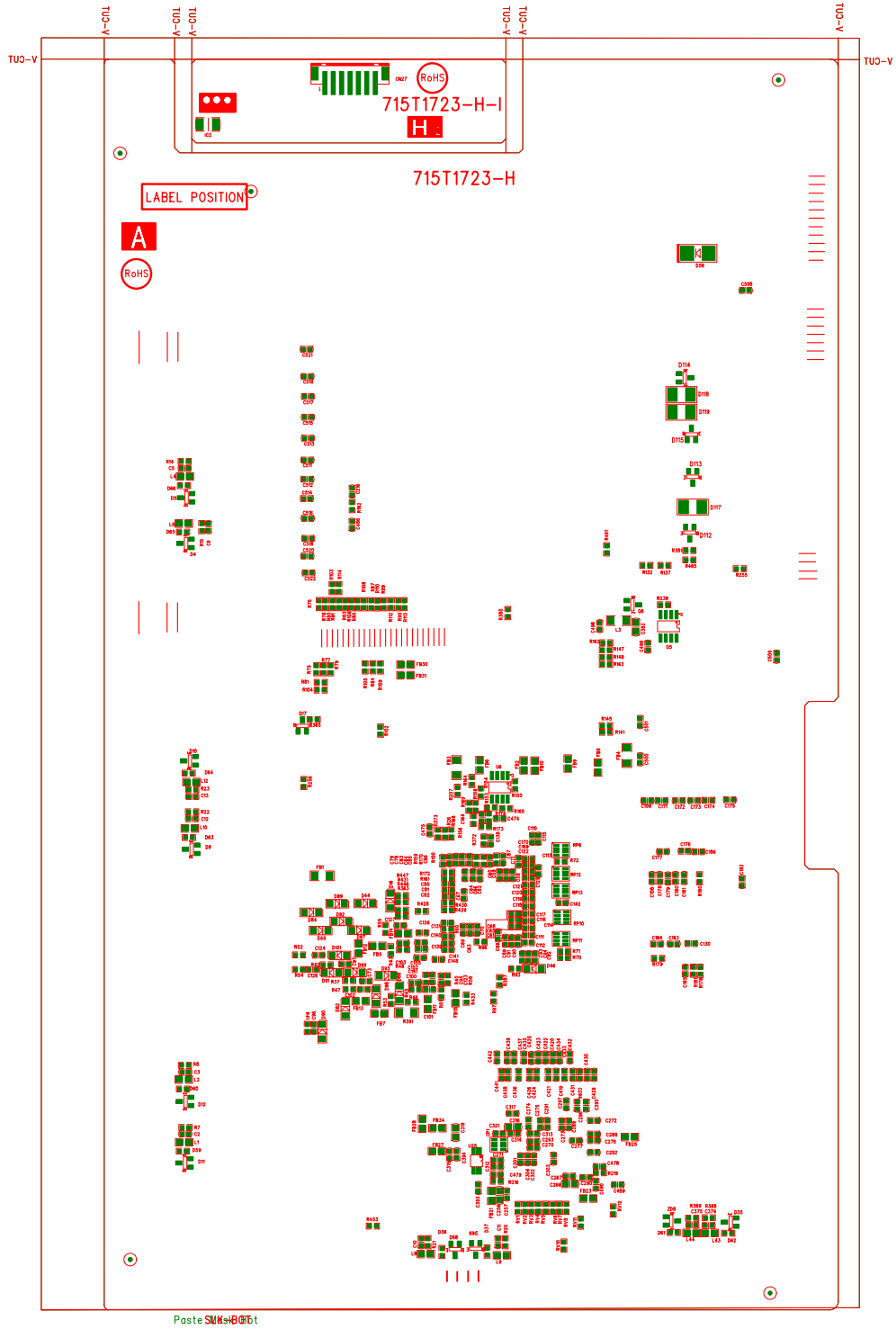

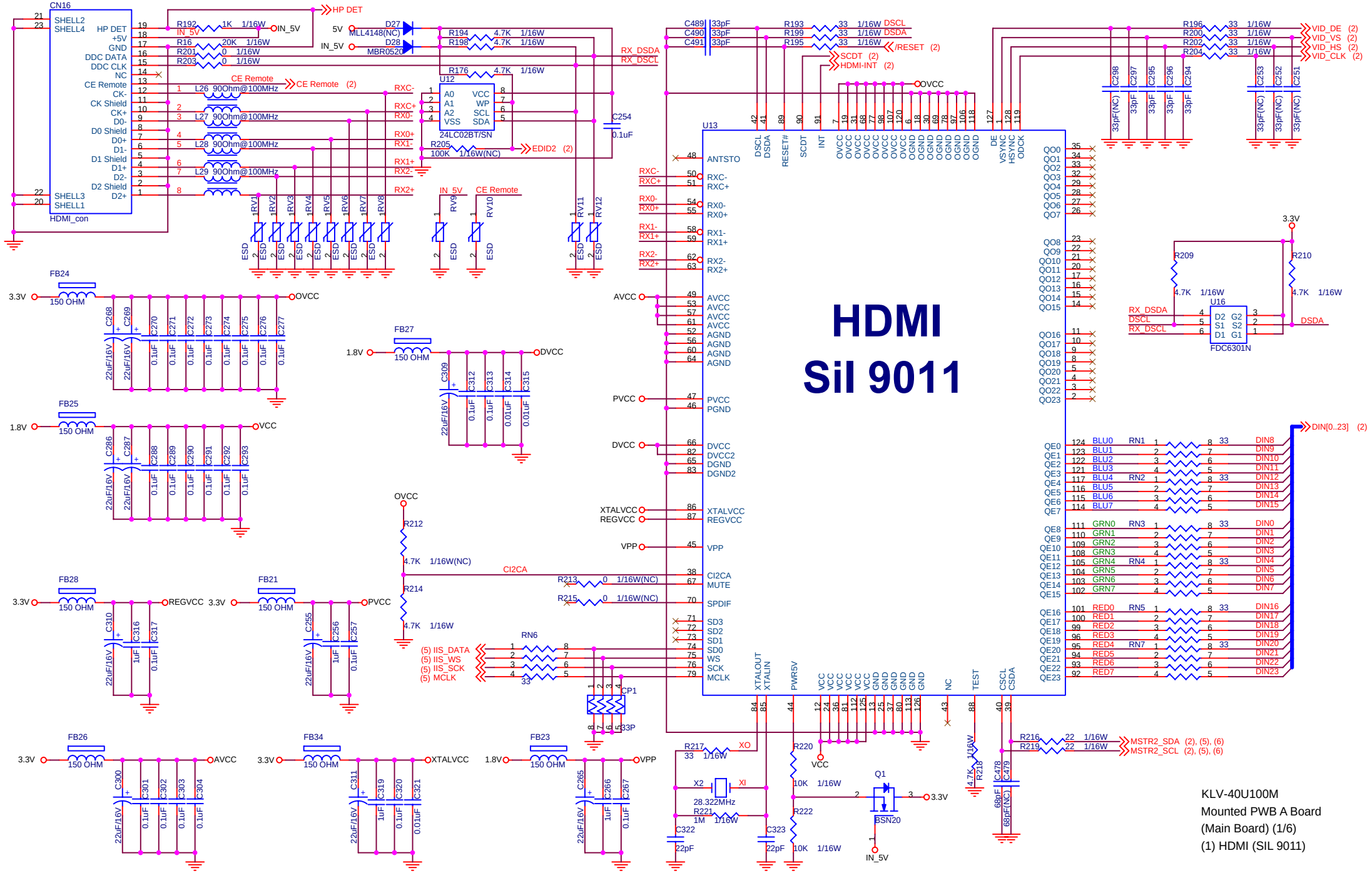
HDMI
Sil 9011
CN16
HDMI_con
U13
U12
24LC02BT/SN
U16
FDC6301N
Q1
BSN20
HP DET
CE Remote
EDID2 (2)
RX_DSDA
RX_DSCL
DSCL
DSDA
/RESET (2)
SCDT (2)
HDMI-INT (2)
OVCC
3.3V
1.8V
VID_DE (2)
VID_VS (2)
VID_HS (2)
VID_CLK (2)
DIN[0..23] (2)
MSTR2_SDA (2), (5), (6)
MSTR2_SCL (2), (5), (6)
(5) IIS_DATA
(5) IIS_WS
(5) IIS_SCK
(5) MCLK
ANTSTO
AVCC
PVCC
DVCC
XTALVCC
REGVCC
VPP
CI2CA
MUTE
SPDIF
XTALOUT
XTALIN
PWR5V
TEST
CSCL
CSDA
DE
VSYNC
HSYNC
ODCK
KLV-40U100M
Mounted PWB A Board
(Main Board) (1/6)
(1) HDMI (SIL 9011)

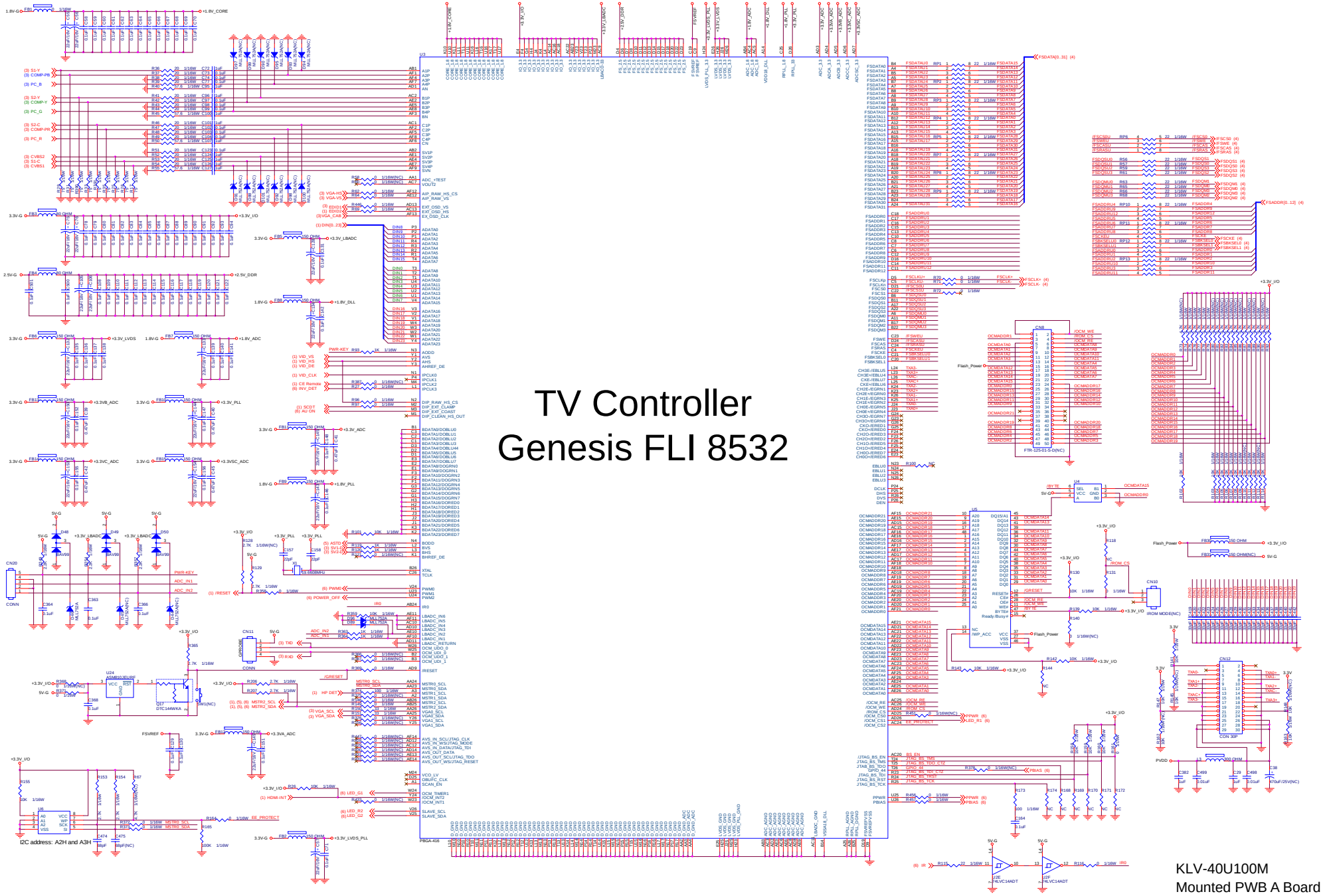

KLV-40U100M
Mounted PWB A Board
(Main Board) (2/6)
(2) TVController FLI 8532

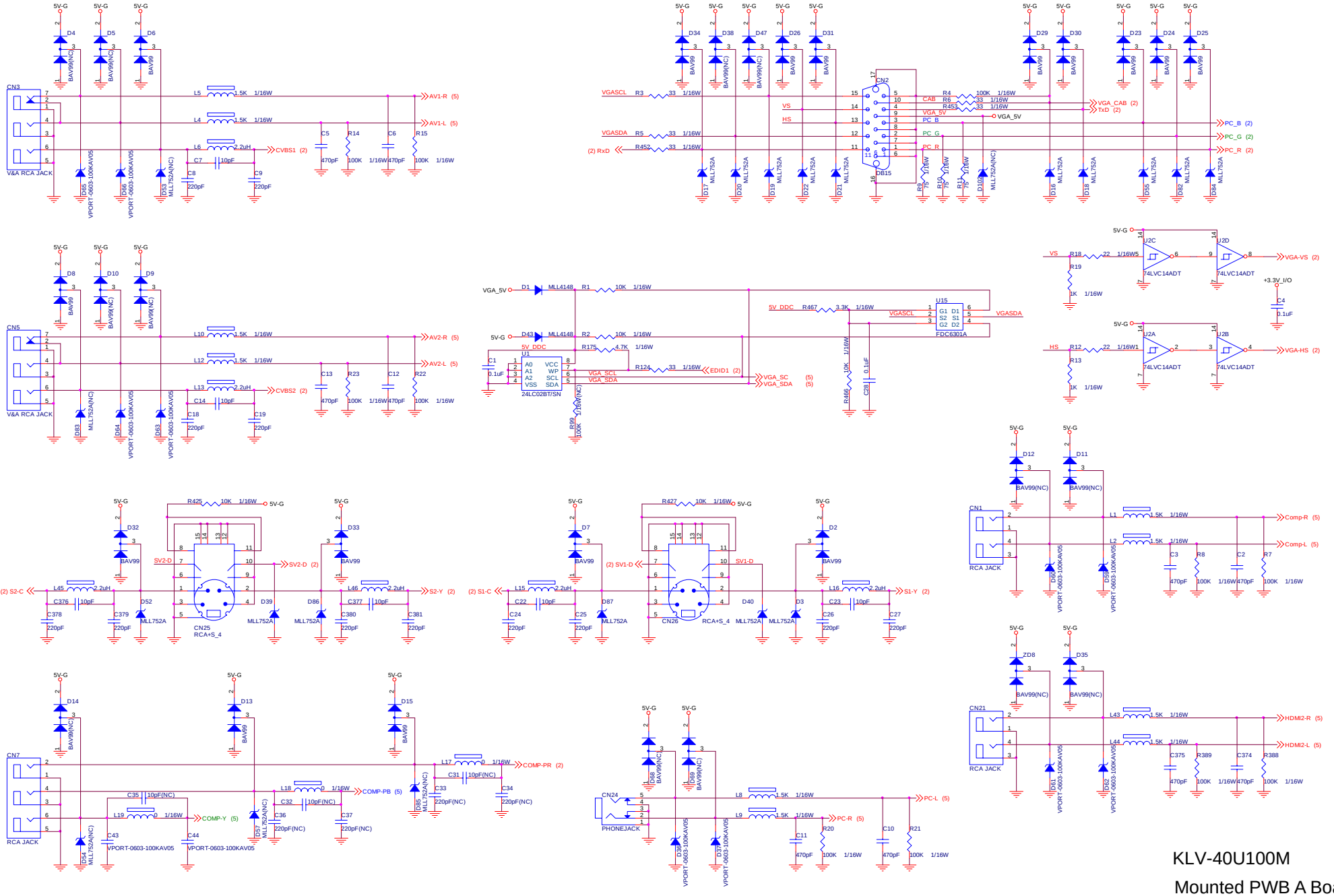

KLV-40U100M

Mounted PWB A Board (Main Board) (3/6)

(3) I/O

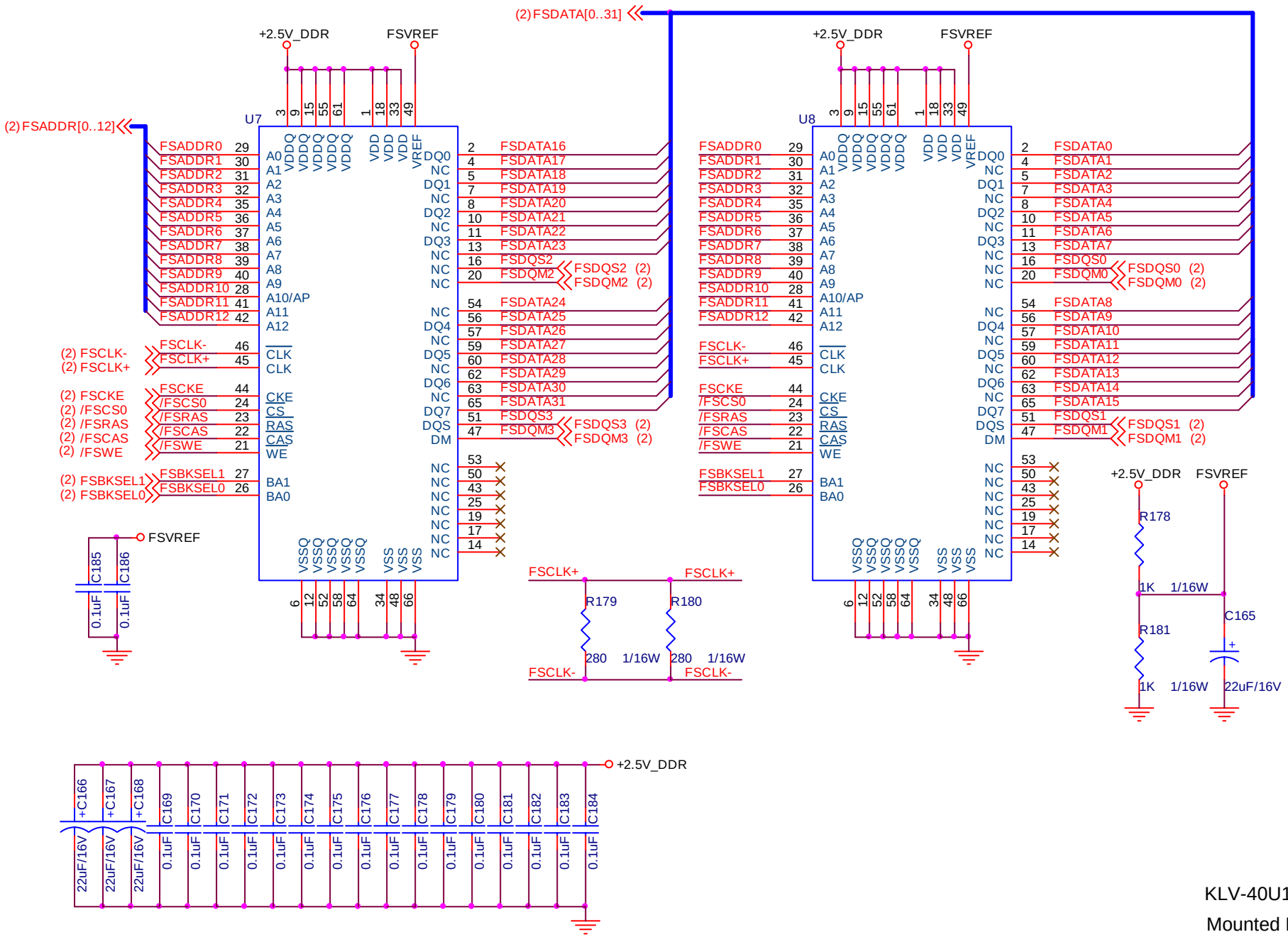

KLV-40U100M

Mounted PWB A Board

(Main Board) (4/6)

(4) Frame Store

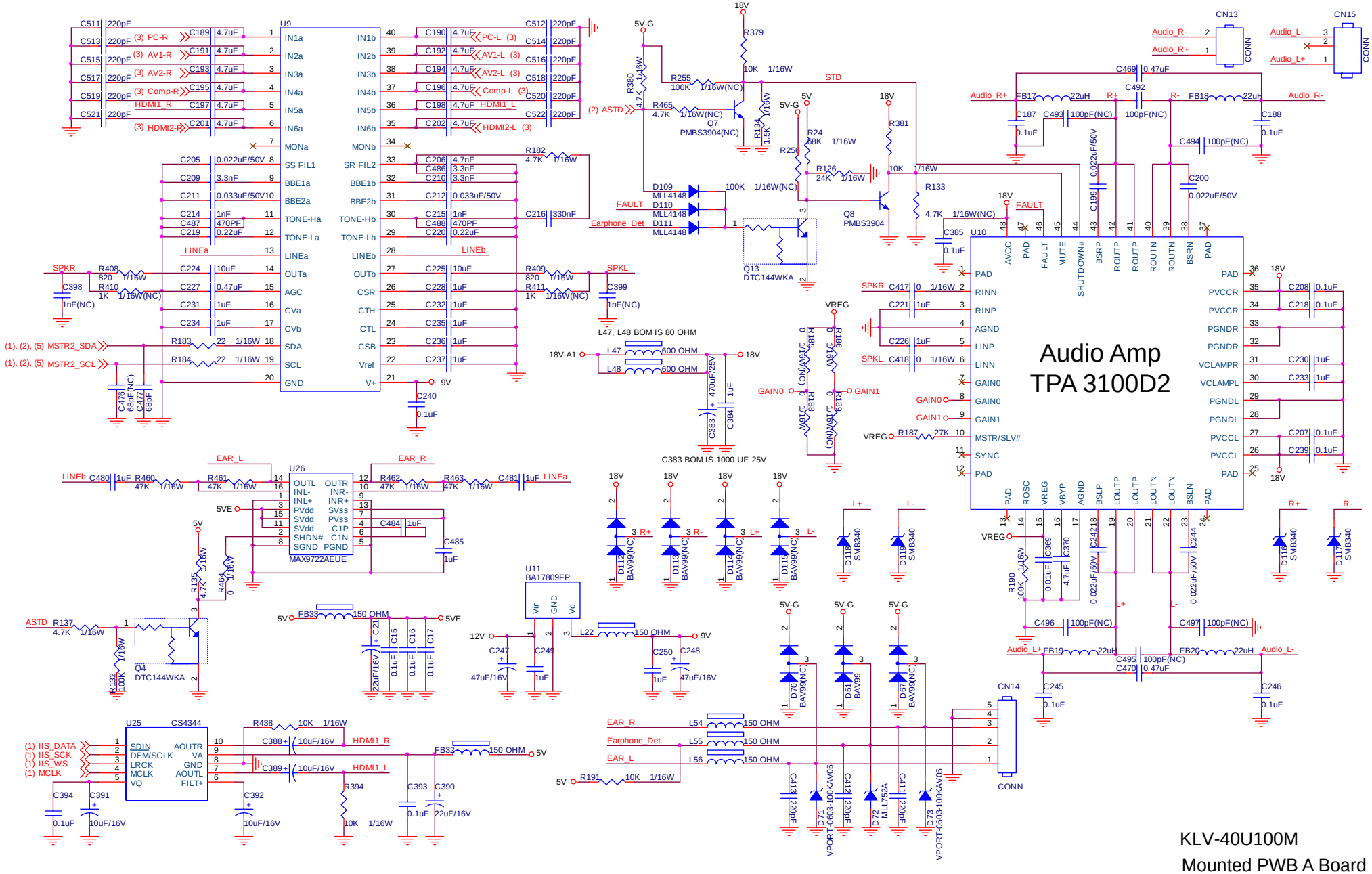

KLV-40U100M
Mounted PWB A Board
(Main Board) (5/6)
(5) Audio Block

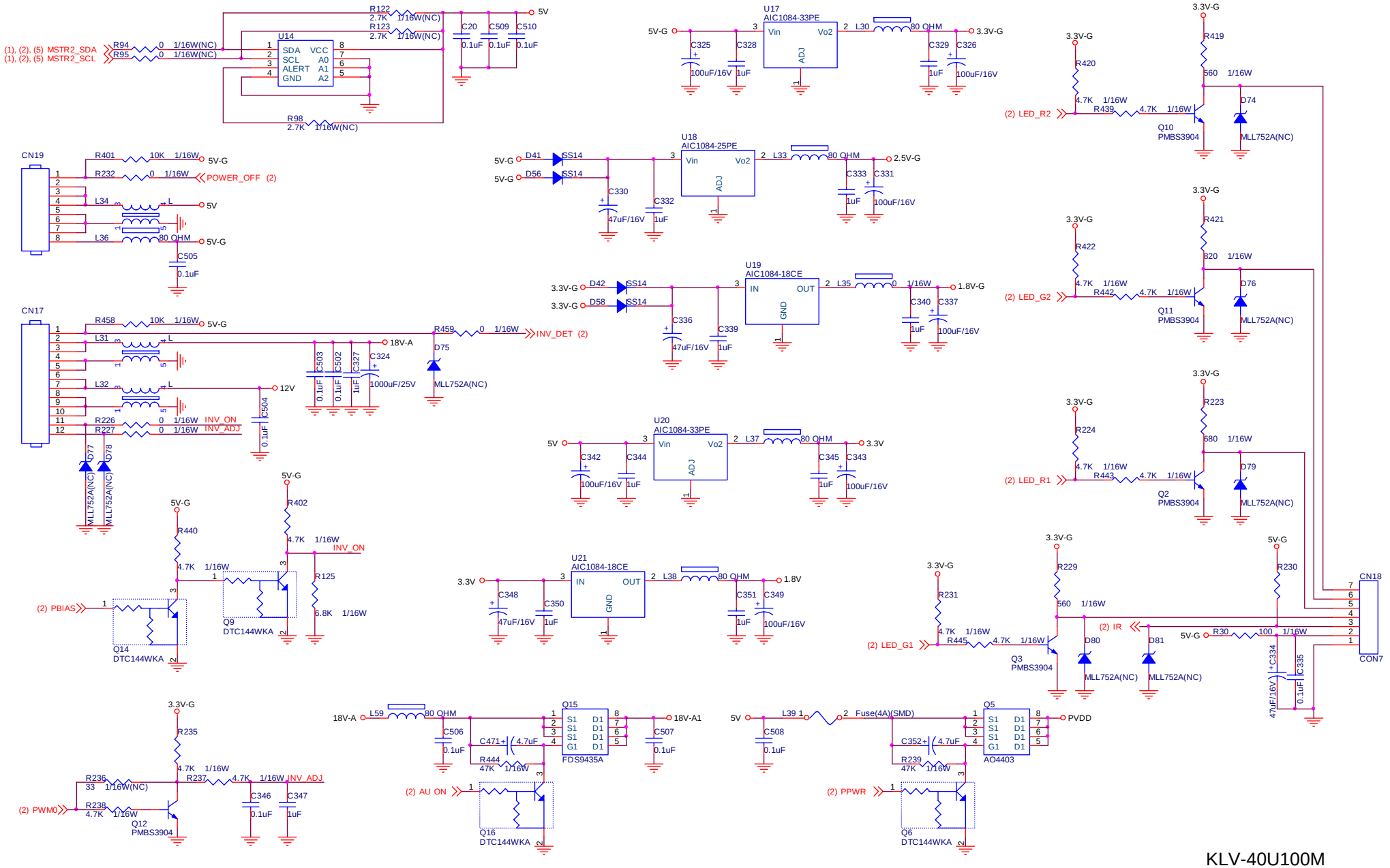

KLV-40U100M
Mounted PWB A Board
(Main Board) (6/6)
(6) Power

PCB LAYOUT

KLV-40U100M

A Board (Main Board) A-side, B-side

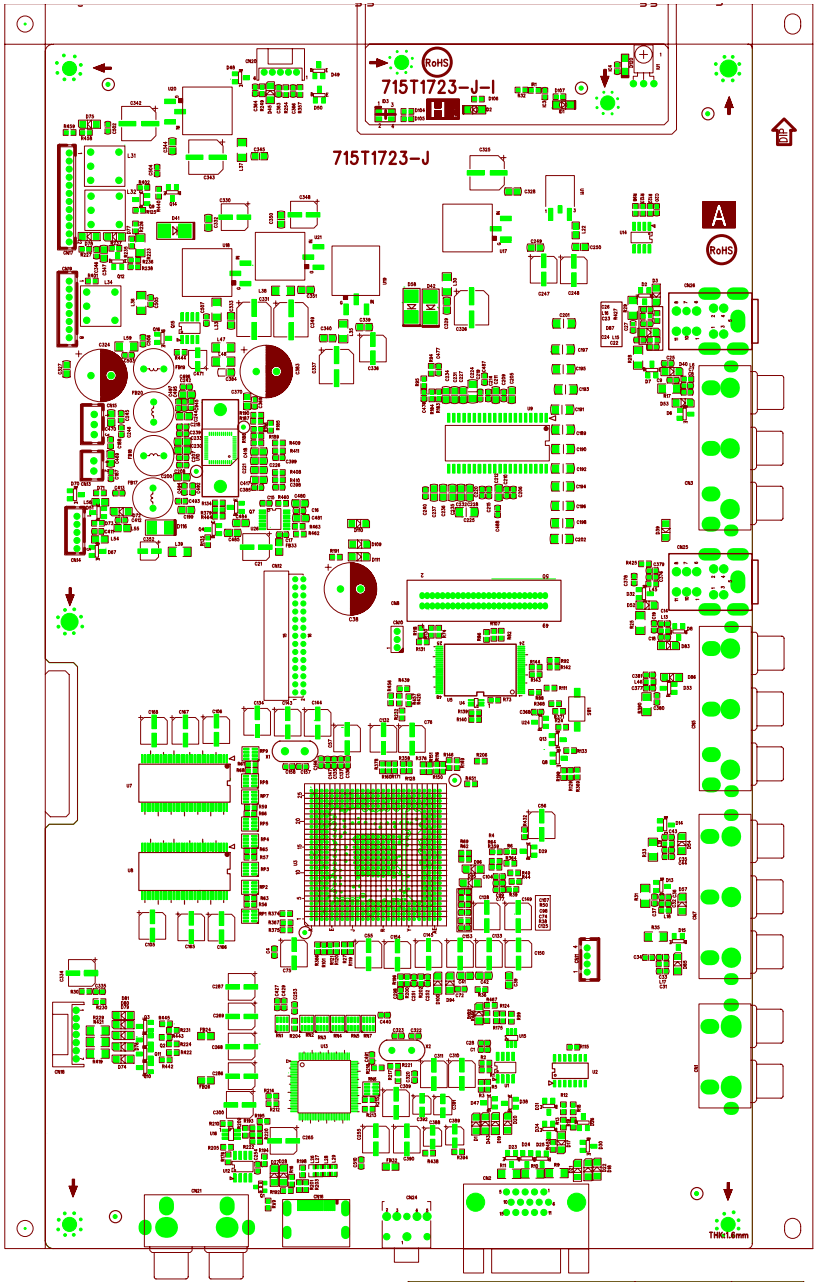

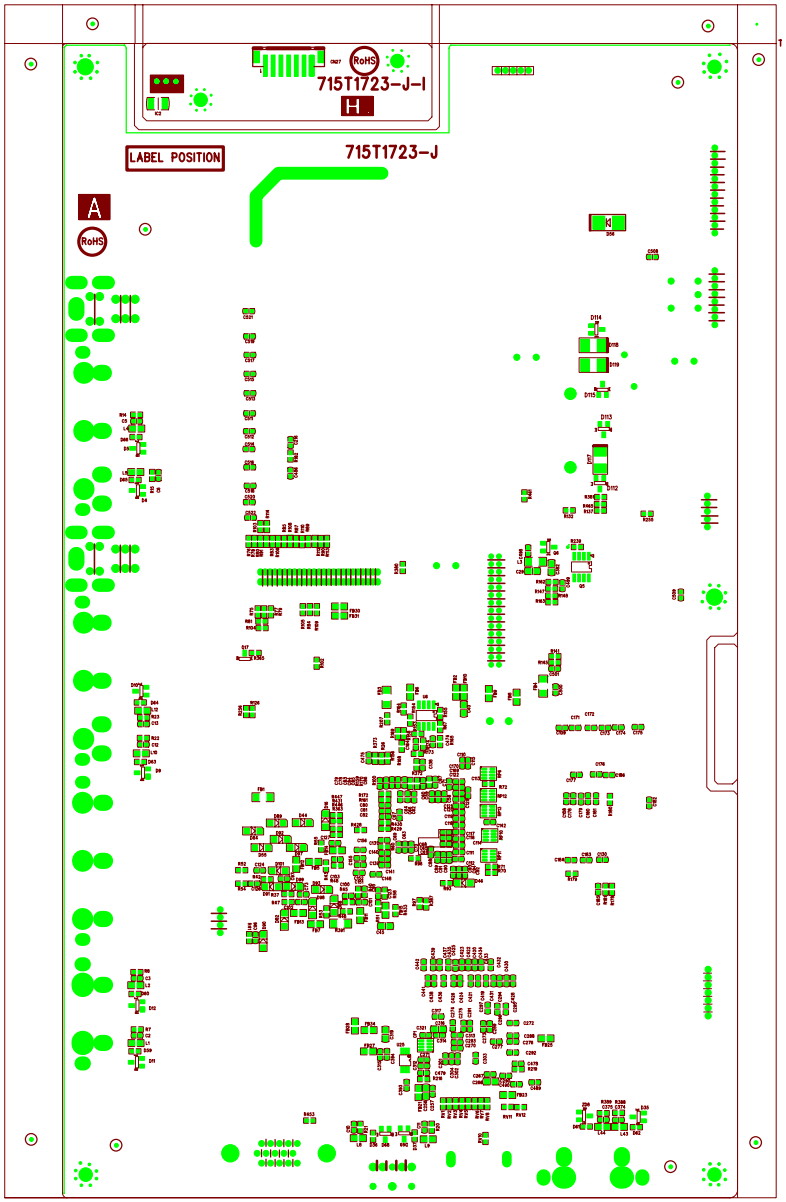

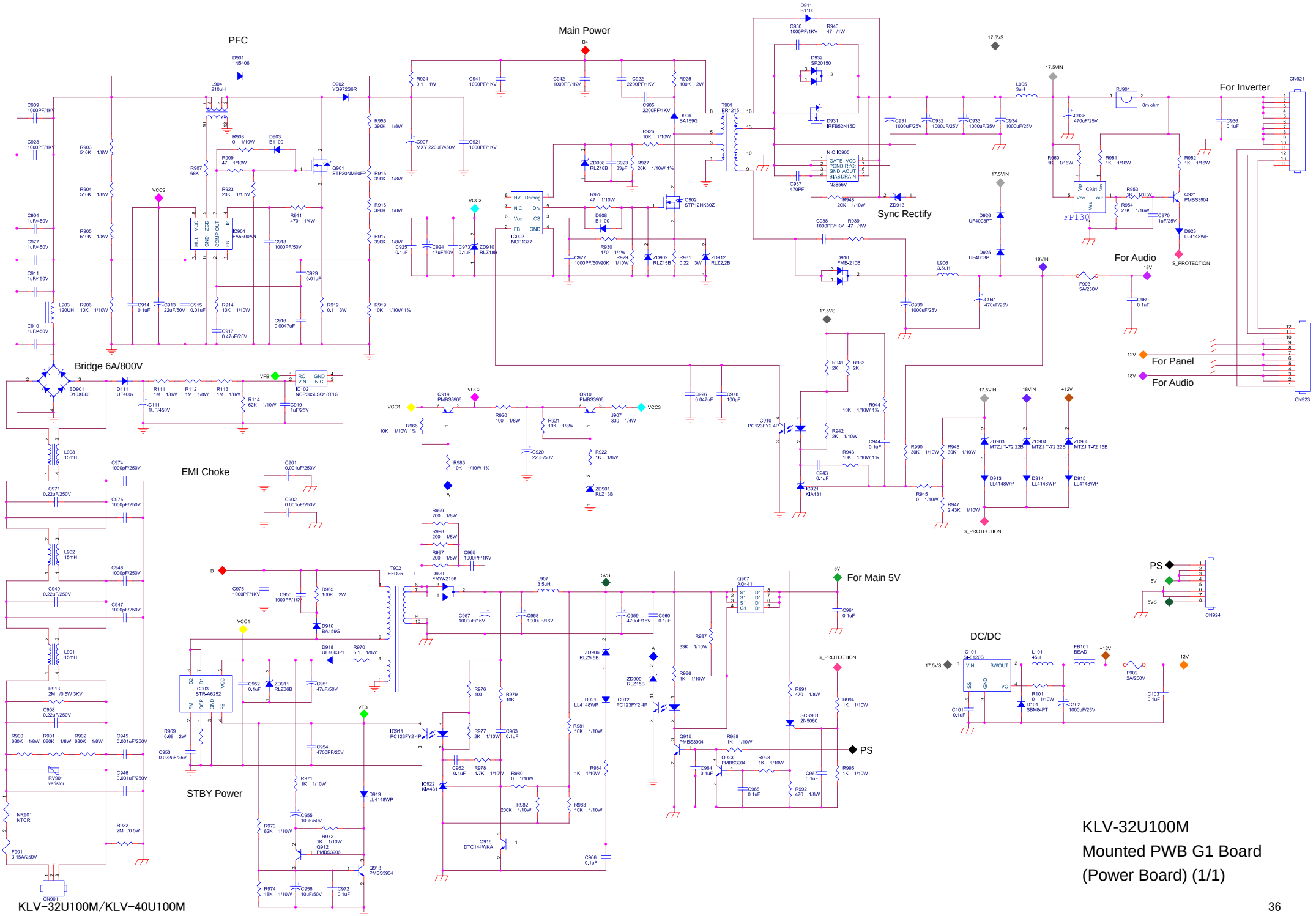

KLV-32U100M
Mounted PWB G1 Board
(Power Board) (1/1)

PCB LAYOUT

KLV-32U100M

G1 Board (Power Board) A-side, B-side

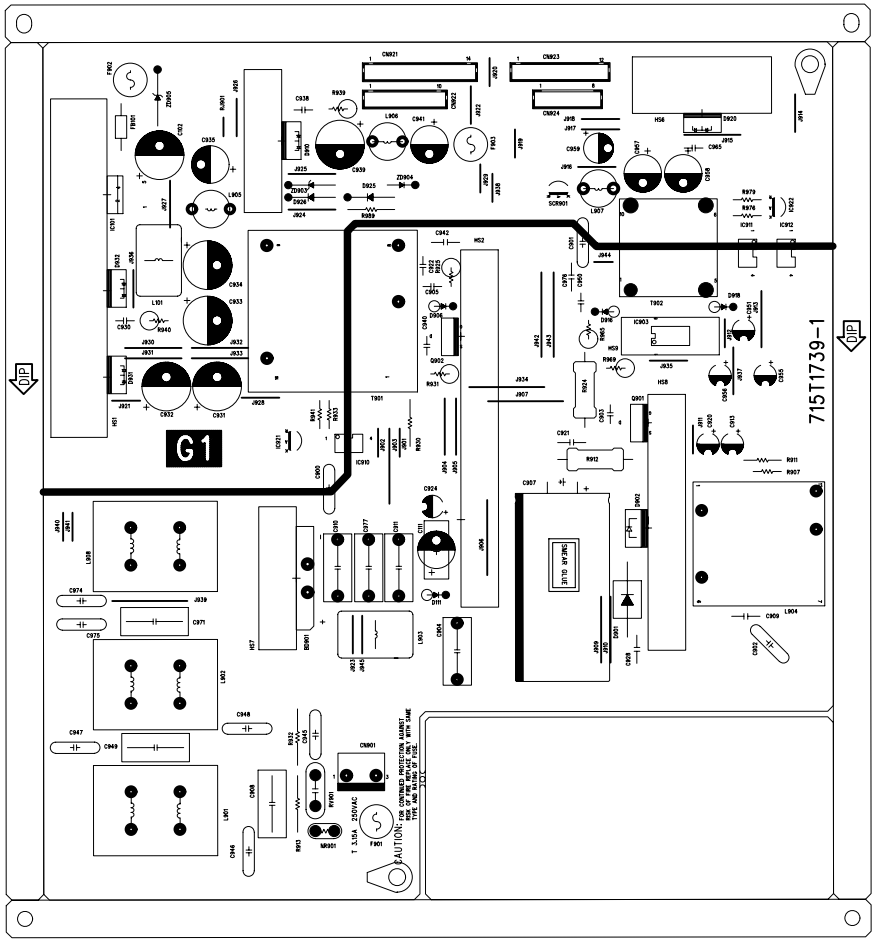

SILKSCREEN SIDE

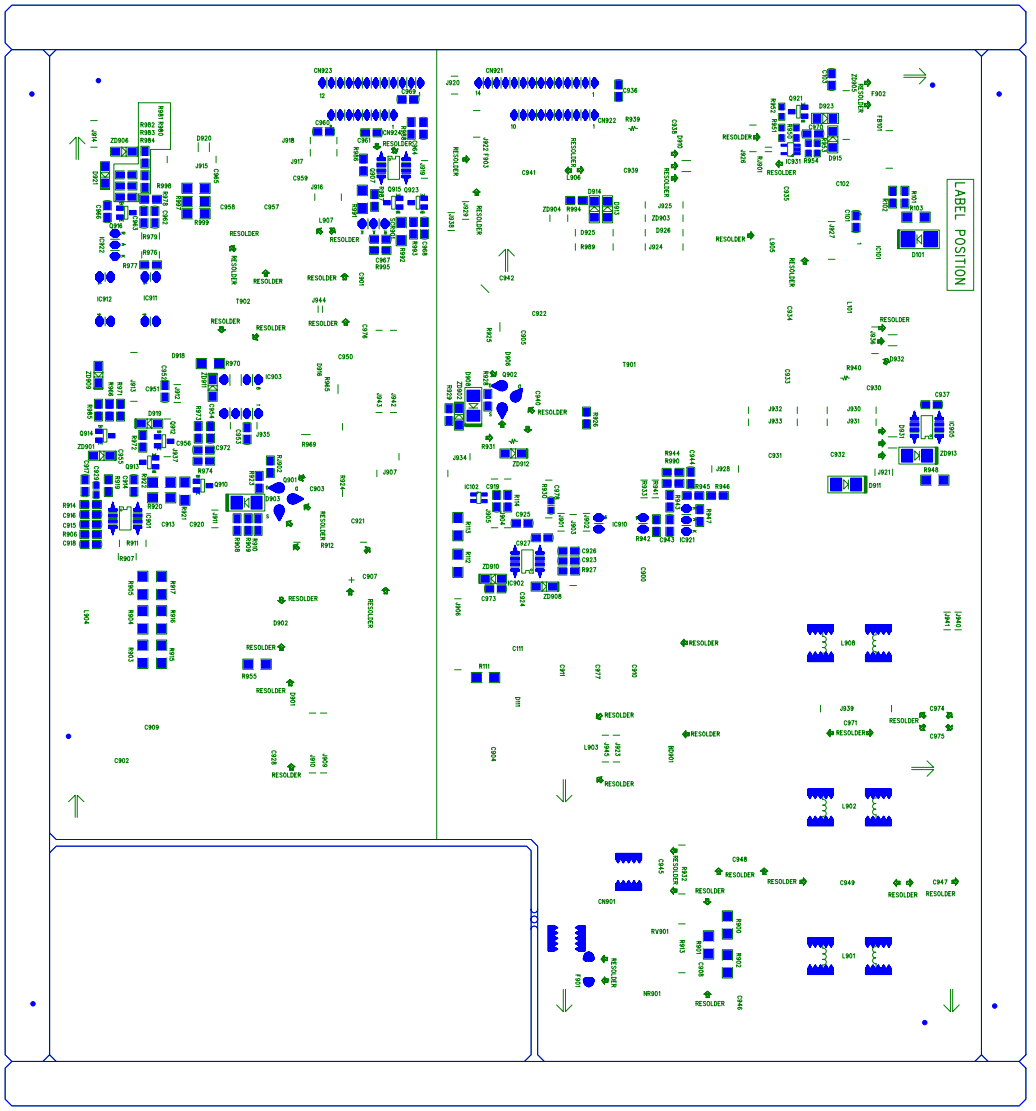

SILKSCREEN BOTTOM SIDE

KLV-32U100M

H1 Board (Key Function Board) A-side

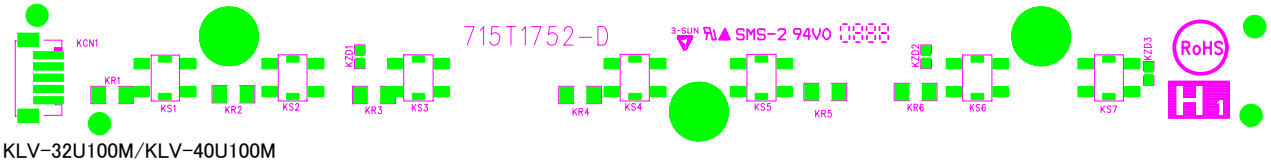

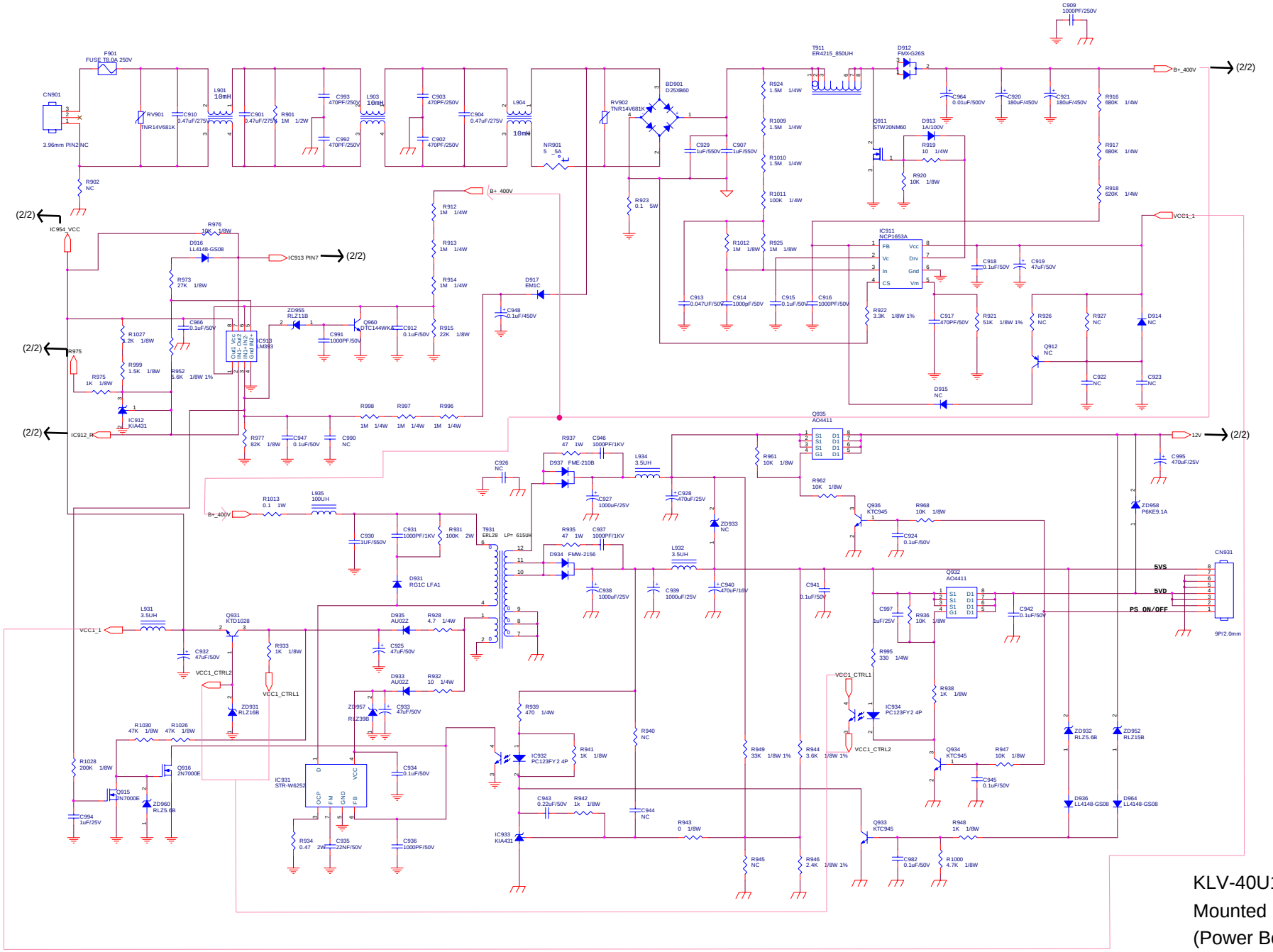

KLV-40U100M
Mounted PWB G2 Board
(Power Board) (1/2)

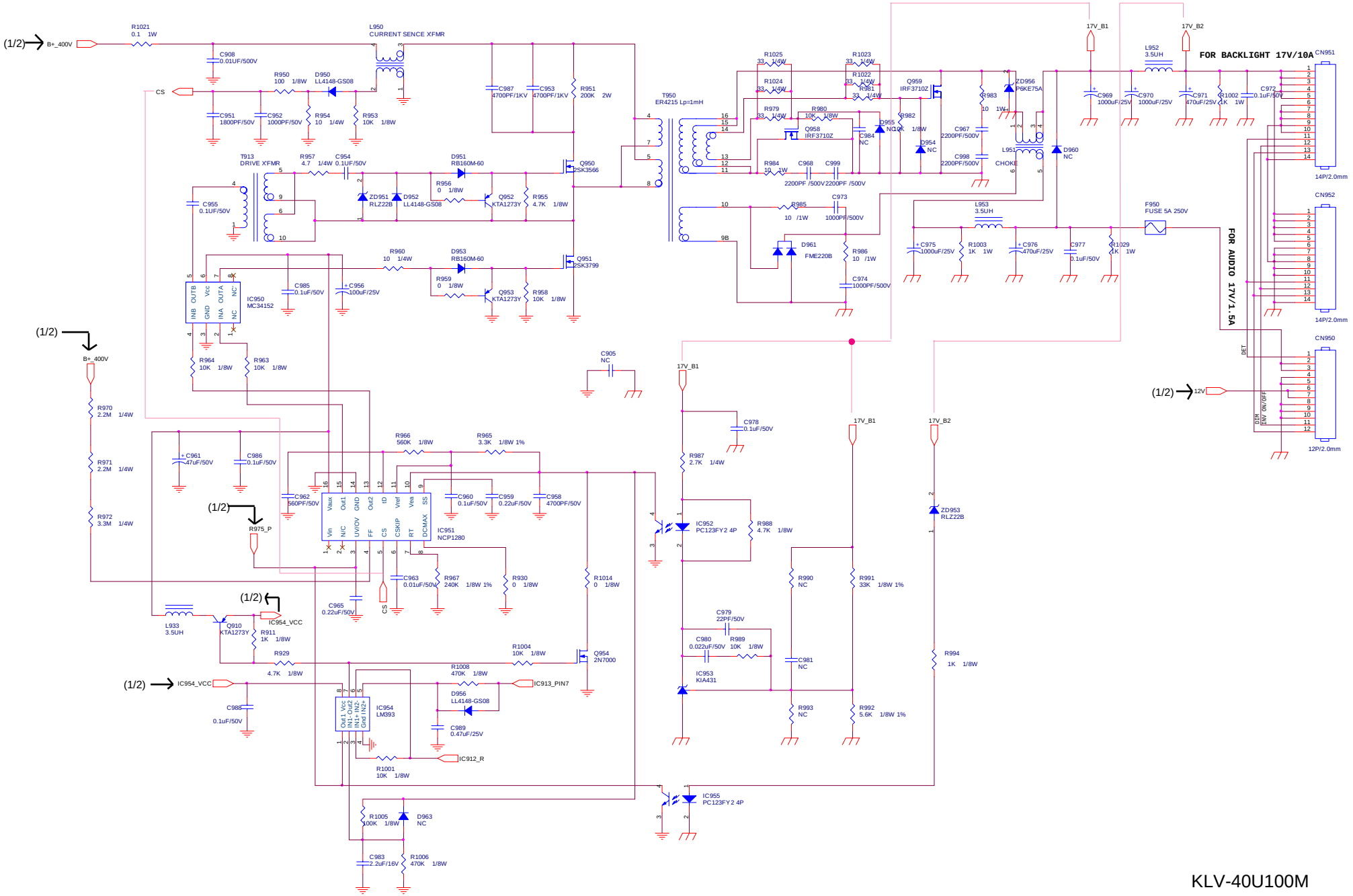

KLV-40U100M
Mounted PWB G2 Board
(Power Board) (2/2)

PCB LAYOUT

KLV-40U100M

G2 Board (Power Board) A-side, B-side

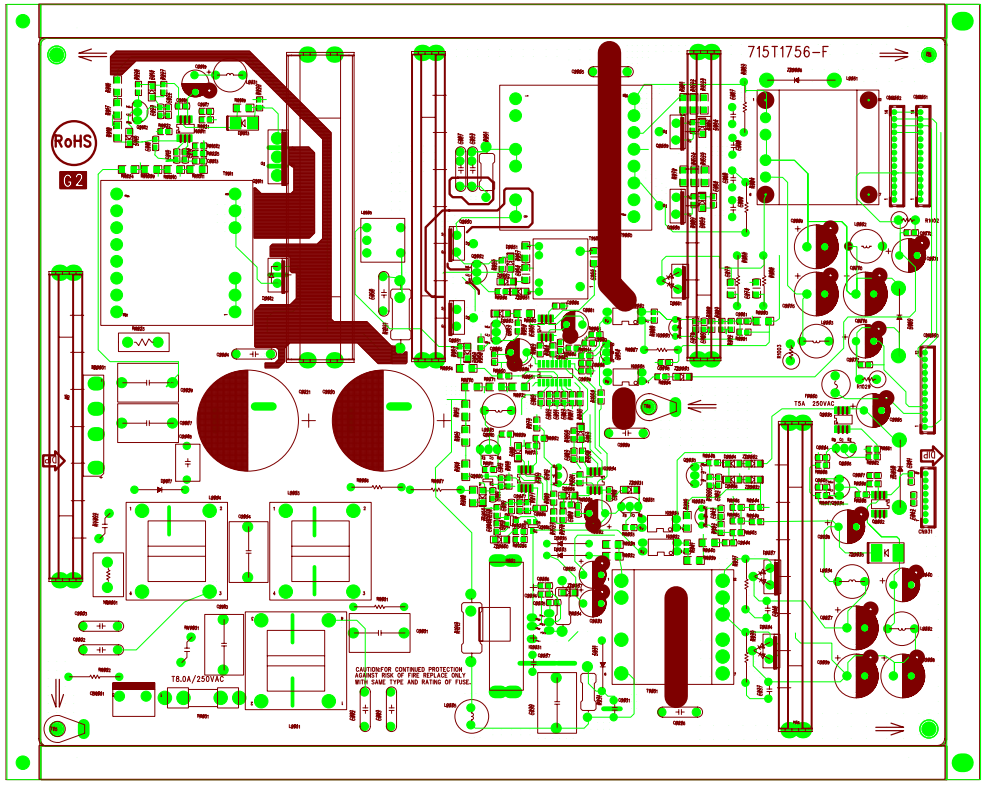

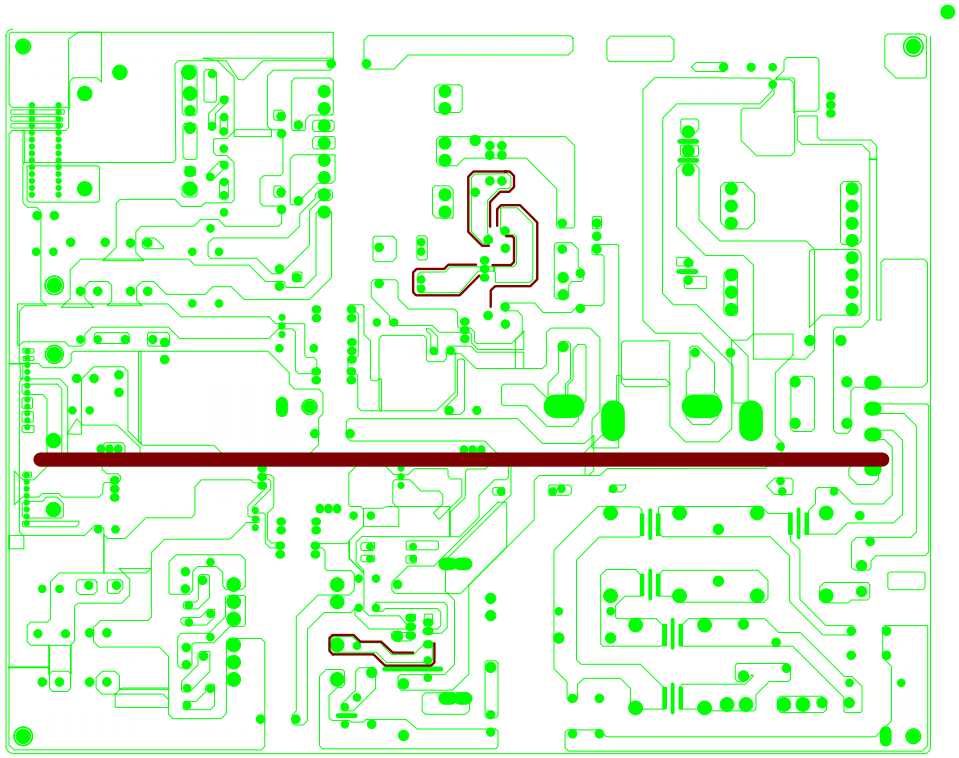

KLV-40U100M

H1 Board (Key function Board) A-side

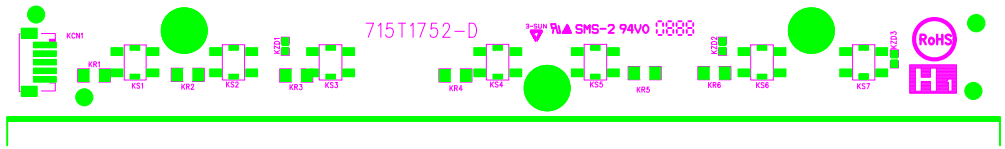

KLV-32U100M / KLV-40U100M

MOUNTED PWB H1 (Key function board)

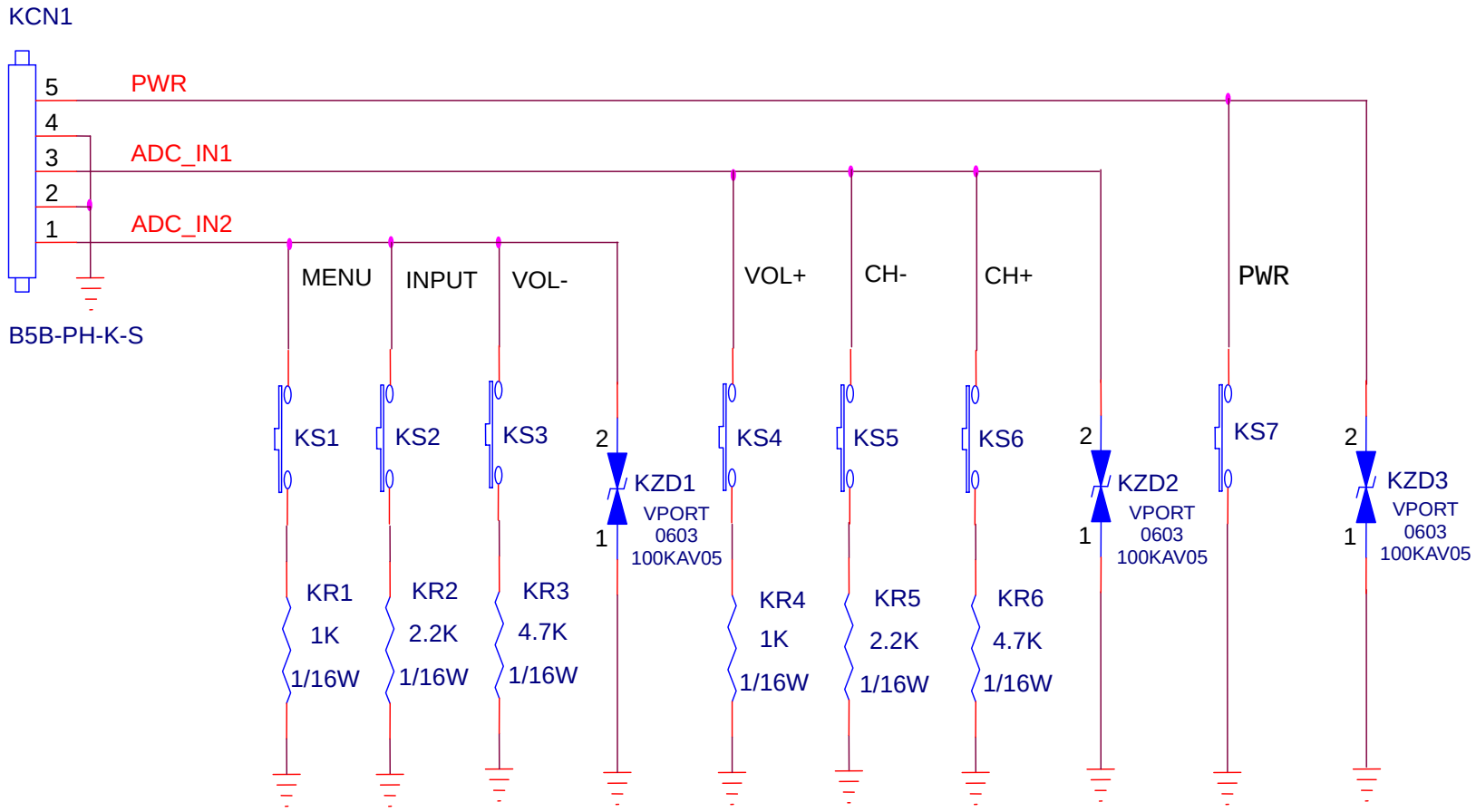

KLV-32U100M / KLV-40U100M

MOUNTED PWB H2 (LED board)

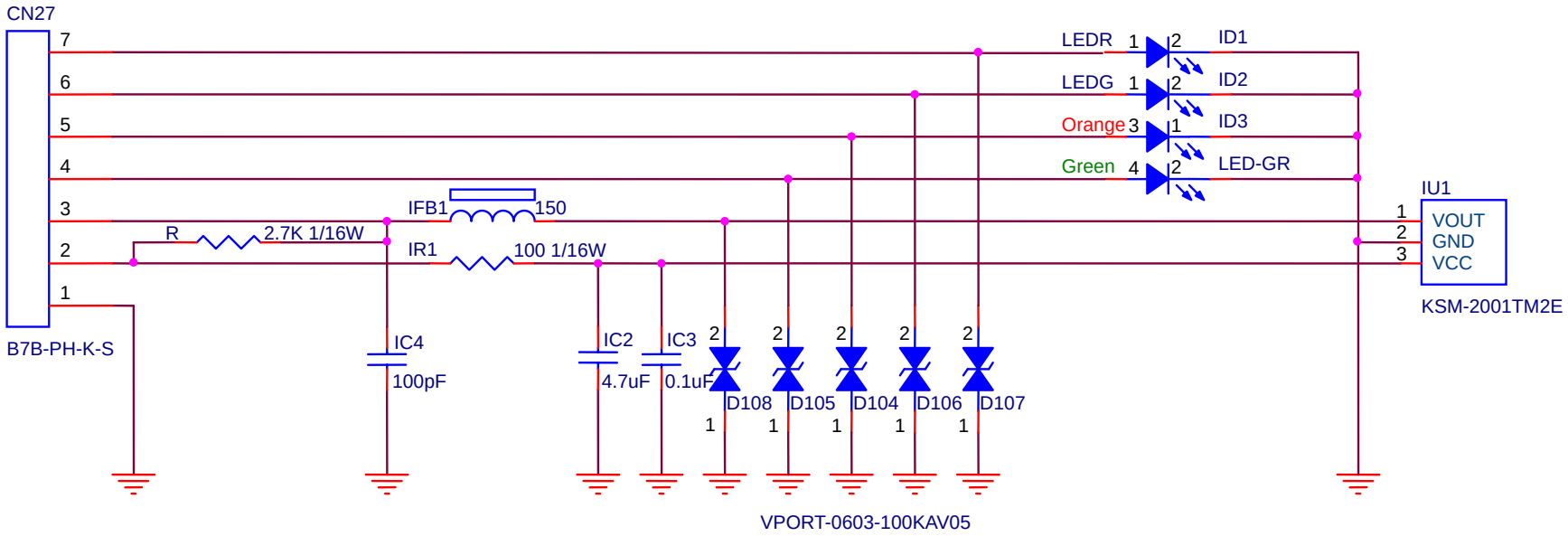

KLV-32U100M / KLV-40U100M
MOUNTED PWB H3 (Ear phone board)

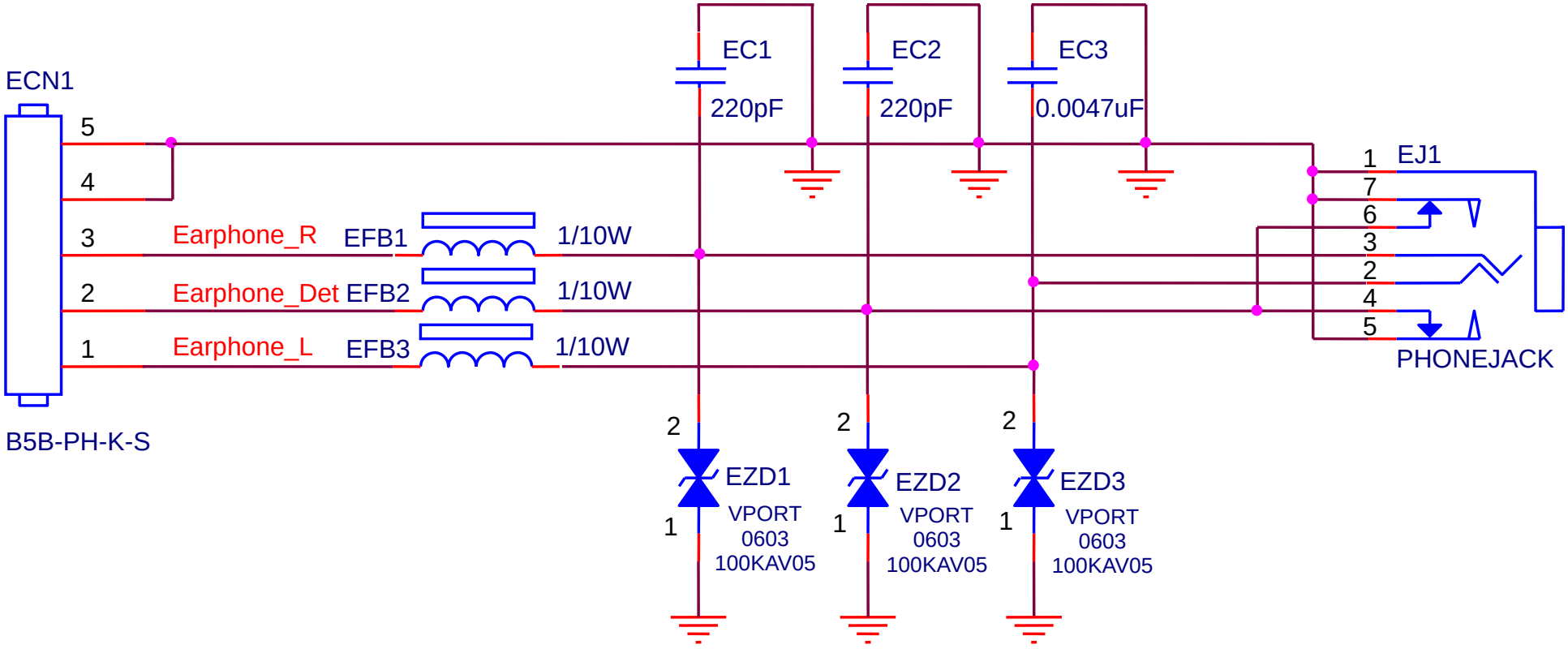

SECTION 6 : EXPLODED VIEW & REPLACEMENT PARTS LIST

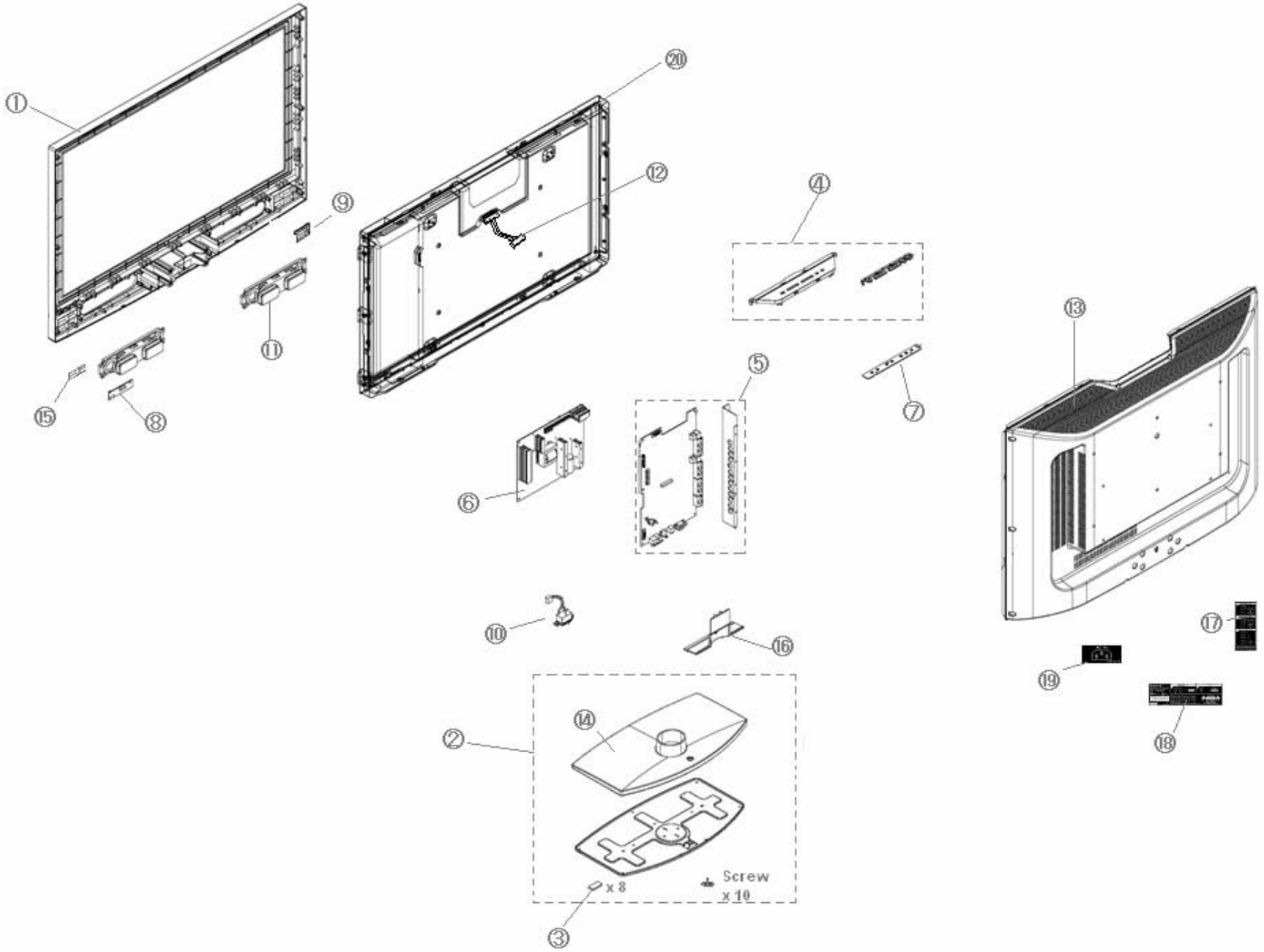

No.	SONY P/N	TPV P/N	DESCRIPTION
1	X-2108-385-1	705LJE5FB34F01	BEZEL ASSY 32″(bezel, logo, led)
	X-2108-387-1	705LME5FB34F01	BEZEL ASSY 40″(bezel, logo, led)
2	X-2108-388-1	705LJE5FB34P01	STAND ASSY 32″(stand, base, base bracket, rubber foot)
	X-2108-389-1	705LME5FB34P01	STAND ASSY 40″ (stand, base, base bracket, rubber foot)
3	2-668-639-01	Q12T 438 1 GP	FOOT, STAND 32″
	2-668-639-01	Q12T7012 2 GP	FOOT, STAND 40″
4	X-2108-390-1	705LJE5FB34B01	BUTTON ASSY 32″(key pad and clip cable)
	X-2108-390-1	705LME5FB34B01	BUTTON ASSY 40″(key pad and clip cable)
5	1-789-465-11	CBPFEF5KLGSFNP	MOUNTED PWB A (main board) 32″
	1-789-465-21	CBPFEM5KLGSFNP	MOUNTED PWB A (main board) 40″
6	1-789-467-11	ADPC18200S1P	MOUNTED PWB G1(power board) 32″
	1-789-496-11	ADPC18250S1P	MOUNTED PWB G2(power board) 40″
7	1-789-468-11	KEPFJA4SFP	MOUNTED PWB H1 (Key board)
8	1-789-469-11	IRPFJA4SFP	MOUNTED PWB H2 (LED board) 32″
	1-789-497-11	IRPFJA2SFP	MOUNTED PWB H2 (LED board) 40″
9	1-789-470-11	EFPFJA2SFP	MOUNTED PWB H3 (Ear phone board)
10	1-819-429-21	705T 320 87S01	AC INLET 32″
	1-819-429-31	705T 400 87S01	AC INLET 40″
11	1-826-354-11	078T 449 1 GP	SPEAKER 32″
	1-826-472-11	078T 449 2 GP	SPEAKER 40″
12	1-910-023-79	095T8018 30102 GP	CONNECTOR ASSY 32″
	1-910-025-24	095T8018 30107 GP	CONNECTOR ASSY 40″
13	2-667-403-01	034T1771 UD A GP	CABINET, REAR 32″
	2-667-405-01	034T1780 UD A GP	CABINET, REAR 40″
14	2-667-**408**-01	O34T1772 UC A GP	COVER, STAND **BASE** 32″
	2-667-**409**-01	034T1781 UC A GP	COVER, STAND **BASE** 40″
15	2-667-451-01	033T4958 1 P GP	LENS 32″
	2-667-519-01	033T4961 1 C GP	LENS 40″
16	2-667-**448**-01	033T4955 UD A GP	COVER STAND 32″
	2-667-**450**-01	033T4960 UD A GP	COVER STAND 40″
17	2-668-011-01	040T 581 834 1A GP	LABEL, SIDE 32″
	2-668-011-01	040T 581 834 1B GP	LABEL, SIDE 40″
18	2-668-012-01	040T 320 834 1B GP	LABEL, BOTTOM 32″
	2-674-555-01	040T 457 834 4A GP	LABEL, BOTTOM 40″
19	2-668-013-01	040T 581 834 4A GP	LABEL, AC
	1-805-870-23		LCD PANEL (32INCH WXGA+TFT) *without CONNECTOR ASSY (No.12)
	1-805-879-32		LCD PANEL (40INCH WXGA+TFT) *without CONNECTOR ASSY (No.12)
21	2-668-009-13	Q41T780083464A GP	MANUAL, INSTRUCTION (English)
22	2-668-009-22	Q41T780083461A GP	MANUAL, INSTRUCTION (French)
23	2-668-010-13	Q41T780083460A GP	GUIDE, QUICK SETUP (English)
24	2-668-010-22	Q41T780083465A GP	GUIDE, QUICK SETUP (French)
25	2-668-029-01	044T3A09 1 GP	CUSHION UPPER 32″
	2-668-037-01	044T4001 1 GP	CUSHION UPPER 40″
26	2-668-030-01	044T3A09 2 GP	CUSHION LOWER 32″
	2-668-038-01	044T4001 2 GP	CUSHION LOWER 40″
27	2-668-031-01	044T3A09834 1A GP	CARTON, INDIVIDUAL 32″
	2-668-039-01	044T4001834 T1A GP	CARTON, INDIVIDUAL 40″
28	2-668-032-01	045T 77 3 GP	BAG, PROTECTION 32″
	2-668-040-01	045T 99609 16 GP	BAG, PROTECTION 40″
29	1-829-876-11	089T1738LAA 17 GP	CABLE, D-SUB
30	2-674-547-01	044T4001834 B1A GP	TRAY 40″
31	3-704-178-41		EMBLEM (NO.8), SONY 32″
	3-704-179-61		EMBLEM (NO.9), SONY 40″
32	1-479-669-11		REMOTE COMMANDER (RM-YA004)

* Ref.No.20, 31, 32: SONY Supply parts (Sony order to parts' vendor directly.)

Sony Corporation
Sony Osaki Technlogy Center

9-878-348-04 **2006.1**